APPENDIX A

All detail drawings, forms, and documents as outlined in Appendix A are illustrative in nature only and should be used as a "guide" for all public works construction documents. Prior to acceptance of any contract, the City Engineer must approve all final proposals.

Appendix A is an abridged collection of detail drawings and forms covering most conditions anticipated. Contact the engineering department for a complete list of all documents on file.

Detail drawings, forms and documents outlined in Appendix A are as follows:

UTILITY LOCATIONS

Detail Number	Title
EDM-100	32' Pavement on 60' ROW
EDM-101	36' Pavement on 66' ROW
EDM-102	42' Pavement on 80' ROW
EDM-103	48' Pavement on 80' ROW

EARTHWORK, GRADING AND GRAVELING

Detail Number	Title
301	Typical Urban Section For 36' Curbs on 66' R.O.W.
302	Typical Urban Section For 42' Curbs on 80' R.O.W.
303	Typical Rural Section with 24' Pavement Width
304	Typical Driveway For Rural Pavement

SEWER AND WATER CONSTRUCTION

Detail Number	Title
401	Type "1" Manhole - Standard Precast Manhole For Sanitary and Storm Sewers
402	Type "7" Manhole – Non-Standard Precast or Block Manhole for Storm Sewers
403	Flat Top Detail for Type "1" Sanitary or Storm Manholes
404	Type "4" Combination Storm Manhole And Inlet Manhole
405	Type "3" Standard Precast Inlet
406	Standard Trench Bedding and Backfilling Requirements

407	Standard Frame & Cover For Sanitary and Storm Manholes
408	Standard Frame & Cover For Sanitary Manholes in Subaqueous or Buried Conditions
409	Standard Frame & Grate For Catch Basins & Inlets
410	Standard Frame & Grate For Driveway Catch Basins & Inlets
411	Field Catch Basin/Inlet Type "1"
412	Hinged Grate For Storm Sewer Outfalls
413	Under Drain Connection Line
414	Storm Lateral Inlet Connection - Storm Clean Out Detail
415	Typical Storm Building Sewer Installation (Lateral)
416	Pavement Saw Cutting For Trench Restoration
417	Utility Trench Restoration For Concrete & Resurfaced Pavements
418	Concrete Caps For Sewers
419	Rip Rap Detail At Storm Outfalls
420	Sewer Piling Detail
421	Manhole Pipe Repair Using Steel & Concrete
422	Type "3" Standard Precast Catch Basin (sump)
423	Tracer Wire Design for New or Relay Sewer Construction
424	Tracer Wire Detail for New Building Laterals in New Subdivisions or Vacant Lots
425	Tracer Wire Detail for Relay of Building Laterals

PORTLAND CEMENT CONCRETE CONSTRUCTION

Detail Number	Title
501	Concrete Curb, Concrete Curb & Gutter or Integral Curb and Pavement Ties
504	Sidewalk and Driveway Construction
505	Depressed Concrete Driveway
506	Standard Curb Ramps Types 1, 2, and 3

506A	Standard Curb Ramps Type 1-A
507	Window Pane Concrete Sidewalk (special finish)
508	Sidewalk Construction Anchors
509	Sidewalk Final Measurement Guide – Sidewalk Assessments on Corner Lots
510	Root Barrier Installation
511	Concrete Pavement Sections – Joint Detail for Integral Curb
512	Concrete Pavement Sections – Joint Detail for Curb & Gutter
513	Urban Doweled Concrete Pavement
514	Concrete Pavement – Typical Joint Layout
515	Concrete Pavement – Various Typical Joint Layouts
516	Concrete Pavement – Approach Slab at Bridge Abutments
517	Standard Cul-de-sac Joint Design (36' Face to Face)
518	Standard Cul-de-sac Joint Design (32' Face to Face)
519	Offset Cul-de-sac Joint Design (36' Face to Face)
520	Offset Cul-de-sac Joint Design (32' Face to Face)
524	Concrete Median Sloped and Blunt Nose Detail
525	Concrete Corrugated Median
527	Alteration To Existing Concrete Spillway
528	Blocking Up Existing Openings in Underground Vaults
529	Mooring Pile Detail

ASPHALTIC CONCRETE CONSTRUCTION

Detail Number	Title
601	Standard Typical Asphalt Section - 66' and 80' R.O.W.

LANDSCAPING AND RESTORATION

Detail Number	Title
701	Tree Planting Detail
702	Shrub Planting Detail

EROSION CONTROL AND STORMWATER MANAGEMENT

Detail Number	Title
801	Stabilized Construction Entrance (Tracking Pad)
802	Inlet Silt Sack Installation
803	Silt Fence Installation
804	Typical Installation of Erosion Bales and Temporary Ditch Checks
805	Inlet Protection Type A, B, and C

TRAFFIC CONTROL

Detail Number	Title
901	Sign and Pavement Markings at Railroad Tracks
902	Pavement Marking Symbols
903	Pavement Marking (Mainline)
904	Pavement Marking (Island, Stop Line and Crosswalk)
905	Alternate Pavement Marking at Crosswalks
906	Tubular Steel Sign Posts

TRAFFIC SIGNALS

Detail Number	Title
951	Signal Concrete Bases Types 1, 2 and 5
952	Signal Pull Box Detail
953	Signal Conduit Detail
954	Signal Loop Detector Placed in C.A.B.C.
955	Sawing in Loop Detectors
956	Signal Concrete Control Cabinet Bases
957	Signal Conduit Location Inside of Control Cabinet
958	Under Ground Electrical Service to Signal Control Cabinet
959	Electrical Service to Signal Control Cabinet from Power Pole

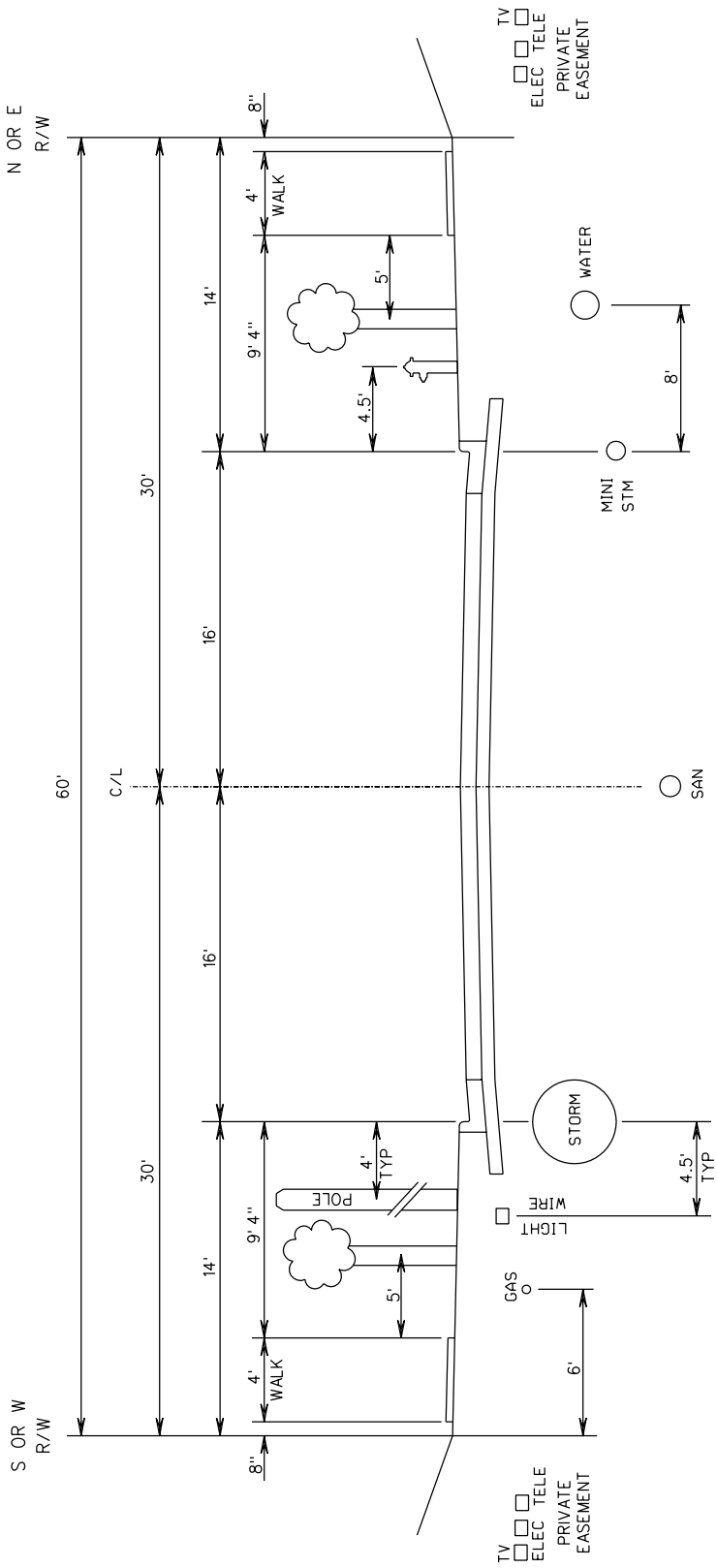

UTILITY LOCATION
(32' PAV'T on 60' ROW)

City of Manitowoc
ENGINEERING DEPARTMENT

Rev. 9/05

FORM NO.
EDM-100

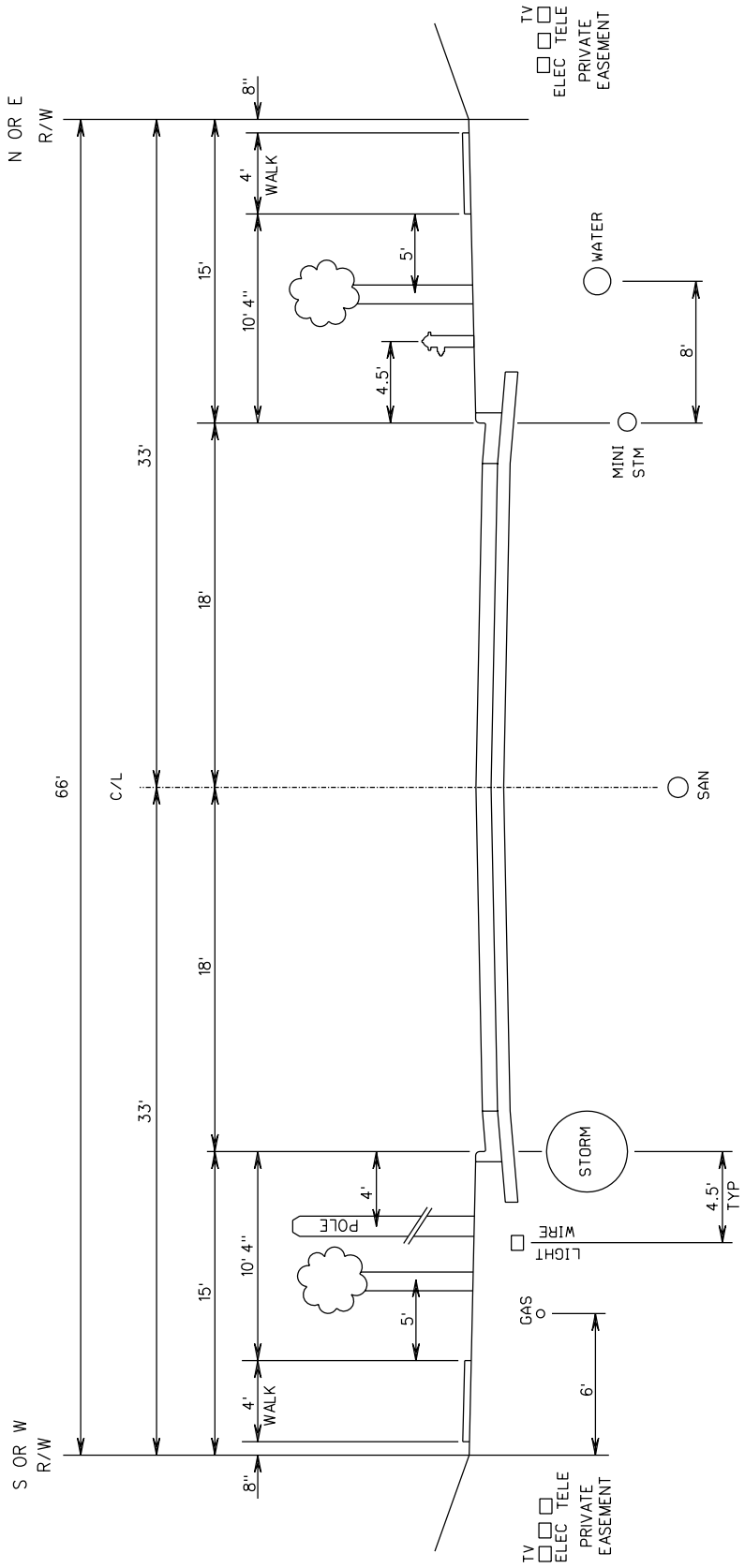

UTILITY LOCATION
(36' PAV'T on 66' ROW)

City of Manitowoc
ENGINEERING DEPARTMENT

Rev. 9/05

FORM NO.
EDM-101

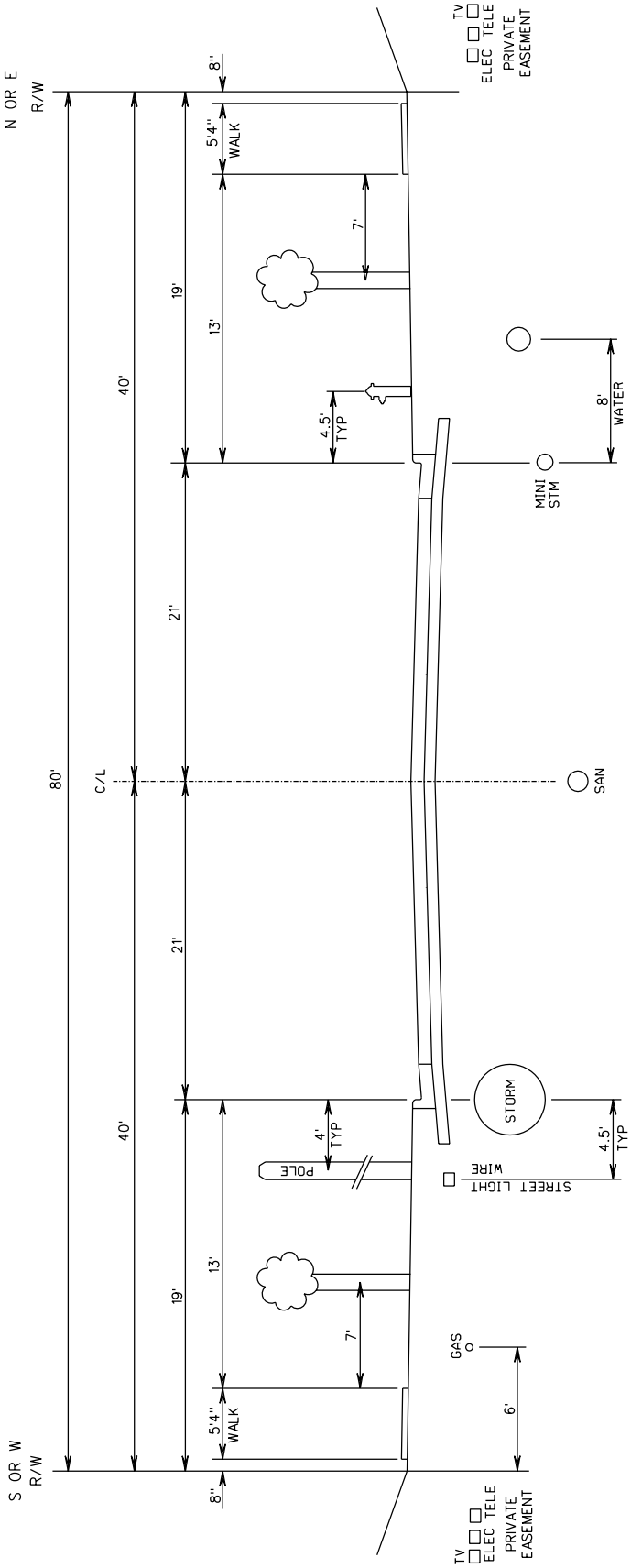

UTILITY LOCATION
(42' PAV'T on 80' ROW)

City of Manitowoc
ENGINEERING DEPARTMENT

Rev. 9/05

FORM NO.
EDM-102

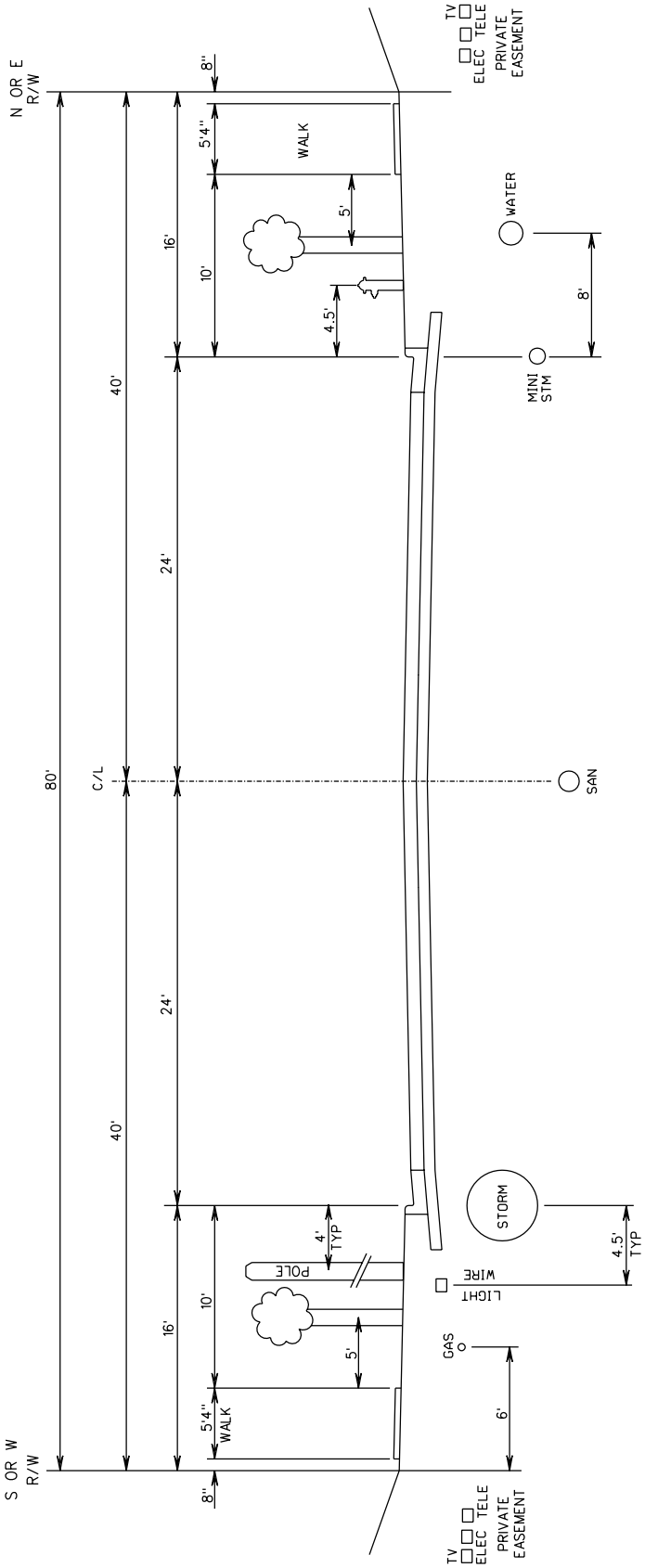

UTILITY LOCATION
(48' PAV'T on 80' ROW)

City of Manitowoc
ENGINEERING DEPARTMENT

Rev. 9/05

FORM NO.
EDM-103

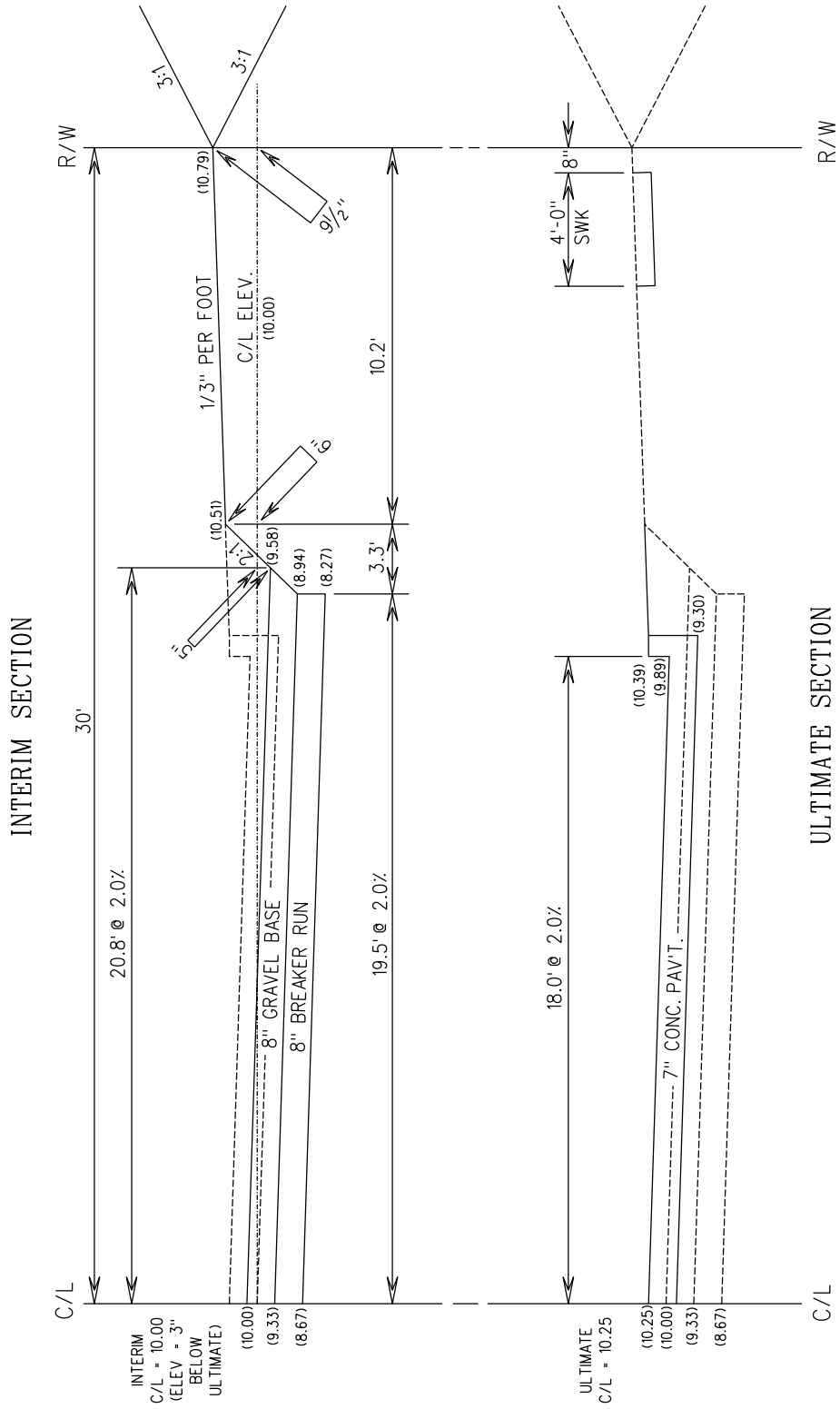

Note: Street shall be graded to the Interim Section.
C/L of Interim Section shall be 3" below
final pavement grade.

NO SCALE

TYPICAL URBAN SECTION FOR 36' CURBS ON 66' R.O.W.

City of Manitowoc
ENGINEERING DEPARTMENT

Rev. 4/05

FORM NO.
301

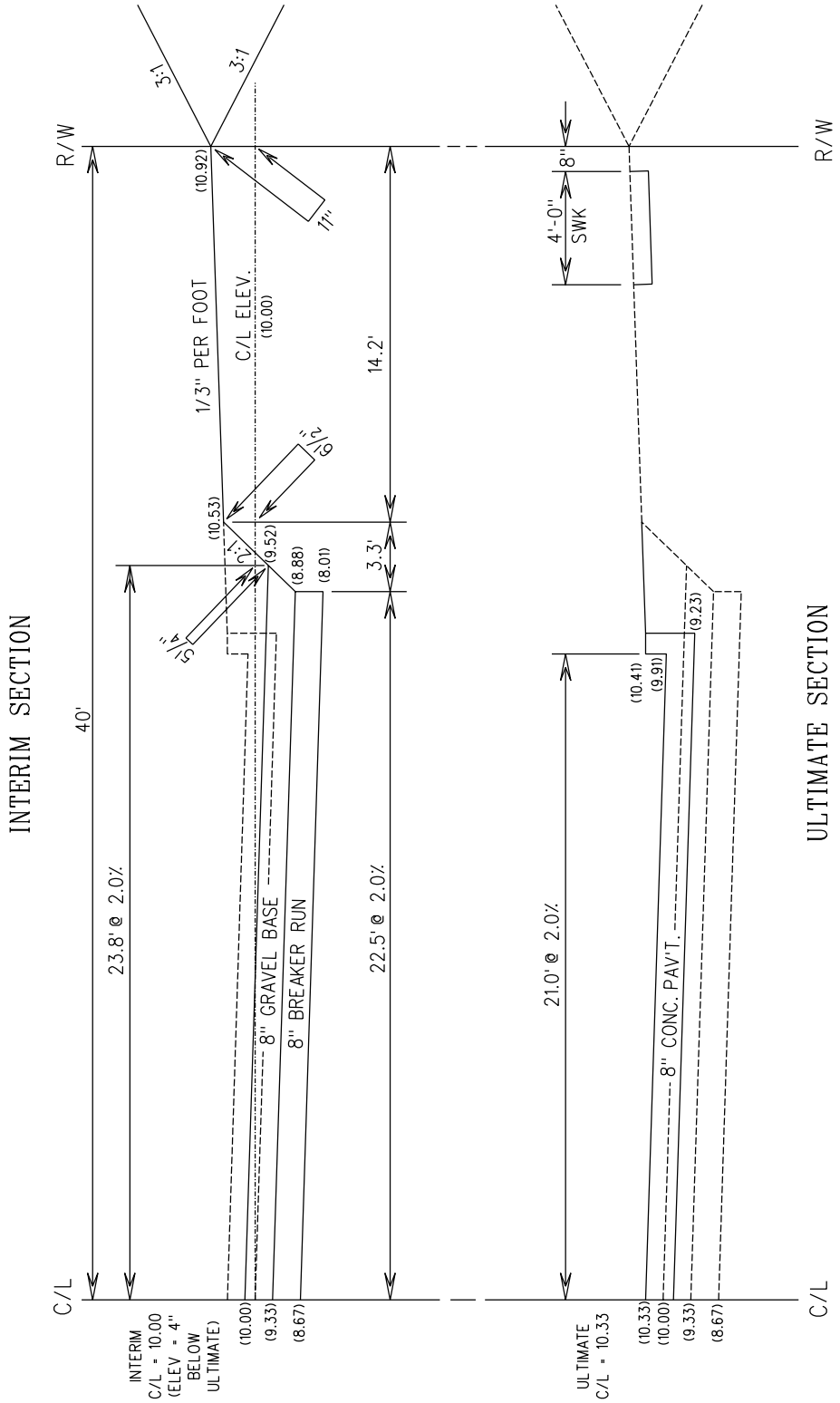

Note: Street shall be graded to the Interim Section.
C/L of Interim Section shall be 4" below
final pavement grade.

NO SCALE

TYPICAL URBAN SECTION FOR 42' CURBS ON 80' R.O.W

City of Manitowoc
ENGINEERING DEPARTMENT

Rev. 4/05

FORM NO.
302

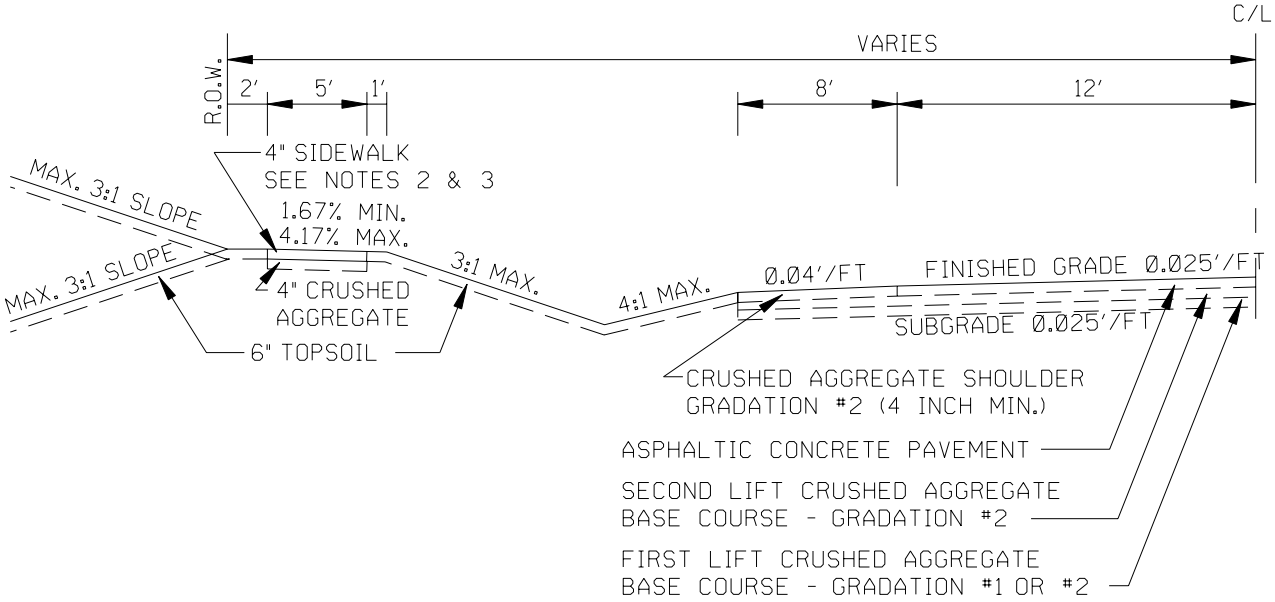

NOTES:

1.) THE THICKNESS OF PAVEMENT AND BASE COURSE SHALL BE AS SPECIFIED IN THE SPECIAL PROVISIONS ON CITY CONTRACTS OR AS APPROVED BY THE CITY ENGINEER ON PRIVATE DEVELOPMENT PROJECTS.

2.) THE STREET SIDE OF THE SIDEWALK SHALL BE AT LEAST 1 INCH BUT NOT MORE THAN 2 1/2 INCHES LOWER THAN THE SIDE AWAY FROM THE STREET.

3.) THE STREET SIDE OF THE SIDEWALK SHALL BE AT LEAST 1/3 INCH ABOVE THE TOP OF THE FUTURE CURB FOR EACH FOOT OF DISTANCE FROM THE BACK OF THE FUTURE CURB.

TYPICAL RURAL SECTION WITH 24' PAVEMENT WIDTH

City of Manitowoc
ENGINEERING DEPARTMENT

Rev. 4/05

FORM NO.
303

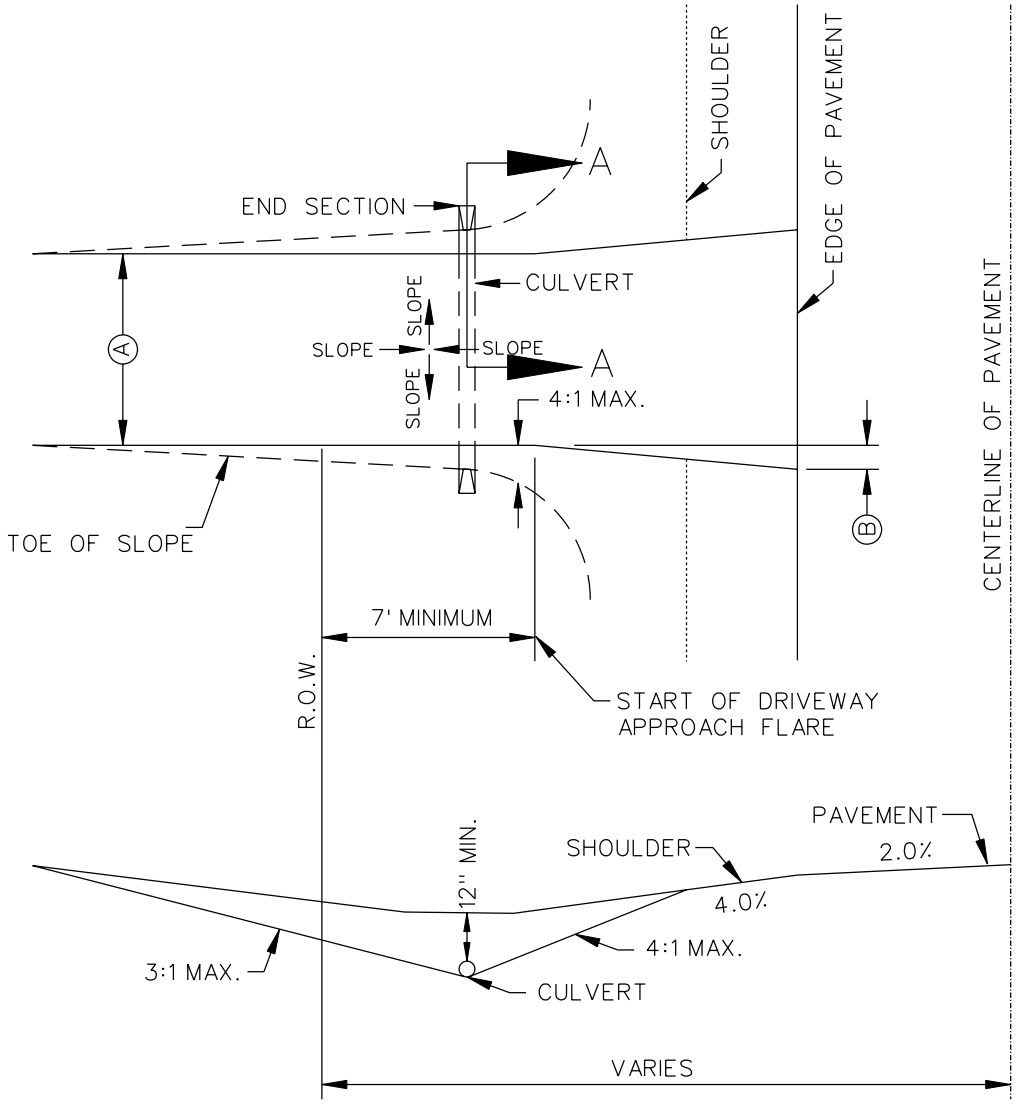

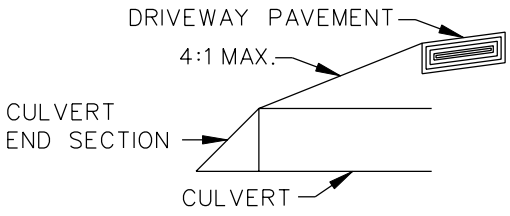

SECTION A-A

(A) ≤ 25' MAX. FOR RESIDETIAL
≤ 35' MAX. FOR COMMERCIAL AND RESIDENTAL DUPLEXS WITH ADJOINING DRIVEWAYS

(B) ≤ 3' FOR RESIDENTIAL PROPERTY
≤ 5' FOR COMMERCIAL PROPERTY

NO SCALE

TYPICAL DRIVEWAY FOR RURAL PAVEMENT

City of Manitowoc
ENGINEERING DEPARTMENT

Rev. 4/05

FORM NO. 304

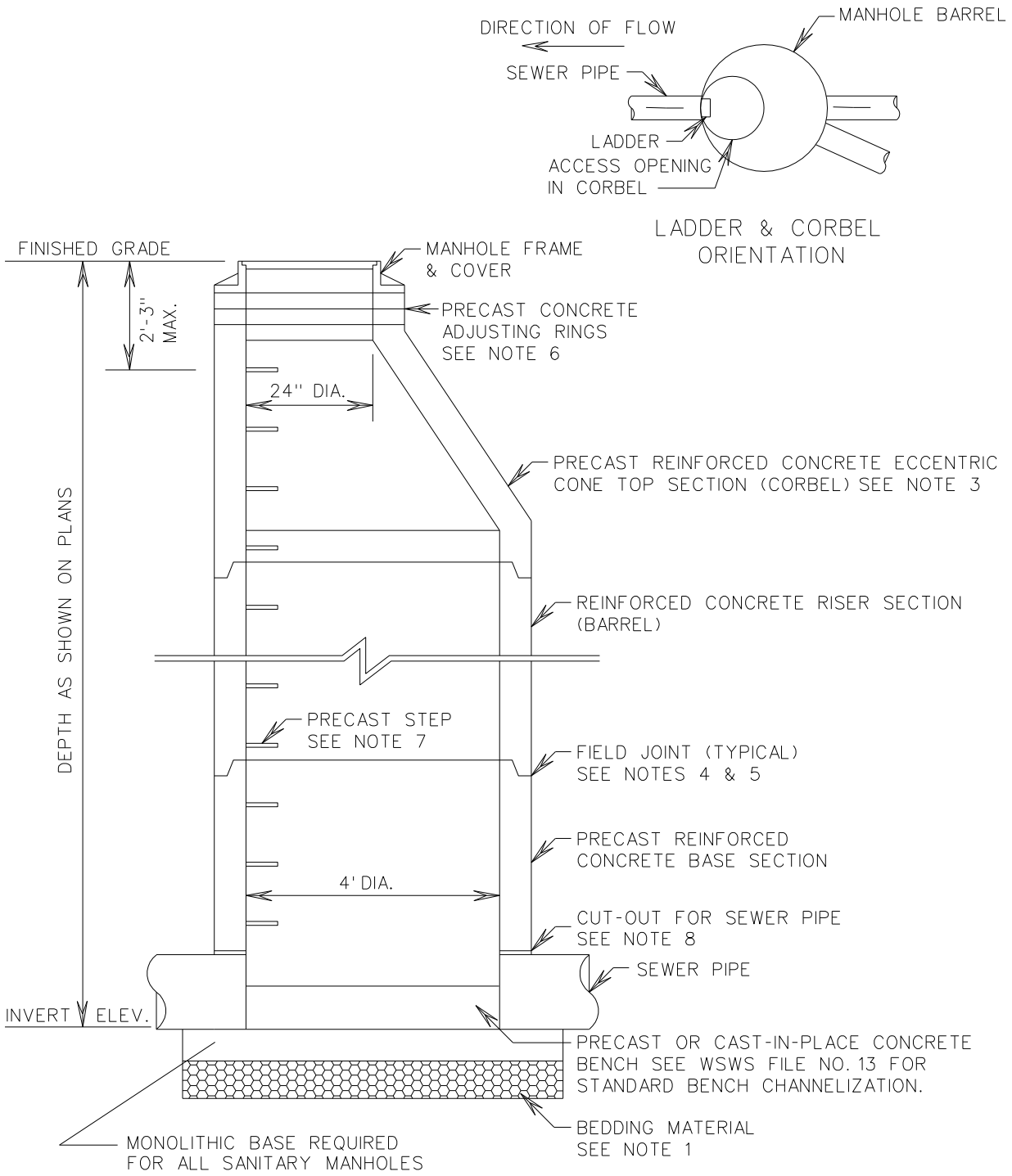

NO SCALE

TYPE 1
STANDARD PRECAST MANHOLE
FOR SANITARY OR STORM SEWERS

City of Manitowoc
ENGINEERING DEPARTMENT

Rev. 11/08

FORM NO.
401
(1 of 2)

NOTES

1. MANHOLE BASE SECTIONS SHALL BE PLACED ON AT LEAST 8" OF BEDDING MATERIAL CONFORMING TO WSWS 8.43.2 FOR DRY SUBGRADE AND WSWS 8.43.6 FOR WET SUBGRADE.

2. CONCRETE AND STEEL REINFORCEMENT SHALL CONFORM TO ASTM C-478 REQUIREMENTS.

3. PRECAST REINFORCED CONCRETE ECCENTRIC CONE TOPS (OFFSET CORBELS) MUST BE USED FOR MANHOLES OF DEPTHS GREATER THAN FIVE (5) FEET.

   IF THE MANHOLE DEPTH, AS MEASURED FROM THE TOP OF THE CASTING FRAME TO THE TOP OF THE MANHOLE BASE SLAB, IS LESS THAN 5 FEET, A FLAT PRECAST REINFORCED CONCRETE MANHOLE TOP SHALL BE USED INSTEAD OF A CORBEL SECTION. THE FLAT MANHOLE TOP SHALL BE PROVIDED WITH AN ECCENTRIC 24" DIAMETER OPENING FOR THE MANHOLE CASTING.

4. PRECAST REINFORCED CONCRETE RISER SECTIONS (BARRELS) MAY BE PLACED WITH TONGUE OR "D" JOINT ENDS EITHER UP OR DOWN.

5. ALL FIELD JOINTS AT MANHOLE PIECES SHALL BE WATERTIGHT AND SHALL BE MADE IN ACCORDANCE WITH WSWS 3.5.4(i).

6. PRECAST REINFORCED CONCRETE ADJUSTING RINGS SHALL BE USED TO ADJUST THE FRAME TO THE REQUIRED GRADE. A MINIMUM OF 4" AND A MAXIMUM OF 10" OF ADJUSTING RINGS AND MORTAR SHALL BE USED FOR THE ADJUSTMENT. MORTAR OR FLEXIBLE SEAL SHALL BE 3/8" MINIMUM THICKNESS BETWEEN EACH RING, RING AND STRUCTURE, AND RING AND FRAME. THE THICKNESS OF EACH GRADE RING SHALL RANGE FROM 2" MINIMUM TO 6" MAXIMUM. GRADE RINGS SHALL BE REINFORCED WITH AT LEAST ONE RING OF STEEL REBAR CENTERED WITHIN THE RING.

7. STEPS SHALL BE PRECAST INTO THE MANHOLE SECTIONS BY THE MANUFACTURER. THE STEPS SHALL MEET THE REQUIREMENTS OF WSWS 6.40.0. THE TOP STEP SHALL BE SET NO LESS THAN THREE (3) INCHES AND NO MORE THAN SIX (6) INCHES BELOW THE TOP OF THE CORBEL. THE STEPS SHALL BE EQUALLY SPACED VERTICALLY AT SIXTEEN (16) INCHES ON CENTER.

8. THE ENTIRE SPACE BETWEEN THE PIPE LEADS AND THE PRECAST MANHOLE WALL SHALL BE MORTARED OR CONCRETED IN PLACE BY THE CONTRACTOR. SOLID CONCRETE BRICKS MORTARED IN PLACE MAY BE USED AS A FILLER FOR STORM MANHOLES.

9. FOR DETAILS OF OUTSIDE DROP TYPE CONNECTIONS OF SEWER PIPE TO SANITARY MANHOLES SEE DETAIL WSWS FILE NO.19

10. ALL SANITARY MANHOLES SHALL HAVE A MONOLITHIC BASE.

TYPE 1
STANDARD PRECAST MANHOLE
FOR SANITARY OR STORM SEWERS

City of Manitowoc
ENGINEERING DEPARTMENT

Rev. 12/07

FORM NO.
401
(2 of 2)

TYPE 7
NON-STANDARD MANHOLE

2'X3' OPENING FOR TYPE "H" INLET MANHOLES
24" DIA. OPENING FOR TYPE "J" MANHOLES
OFFSET OPENING TO MATCH STEPS

CASTING AND ADJUSTMENT RINGS

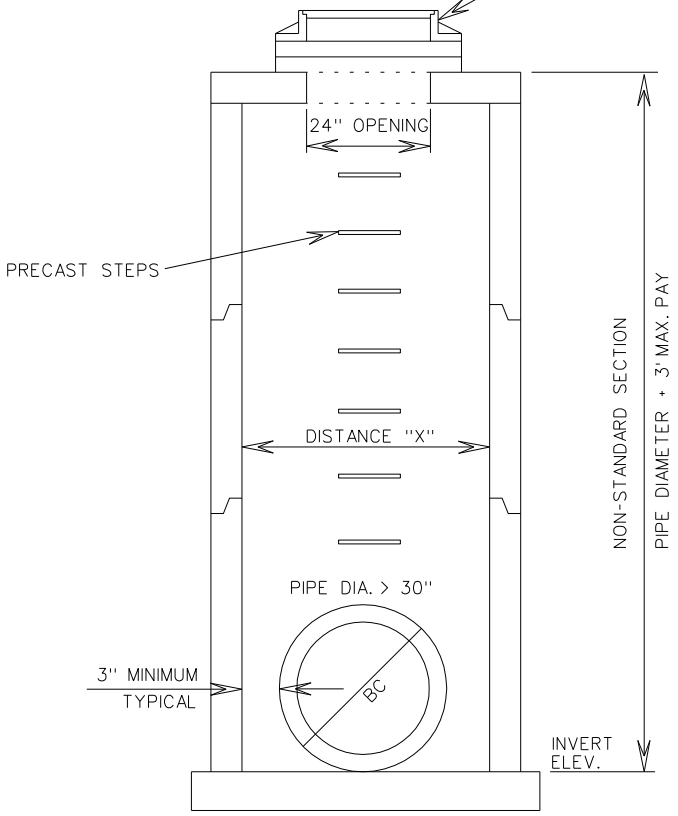

DETAIL OF SHALLOW MANHOLE

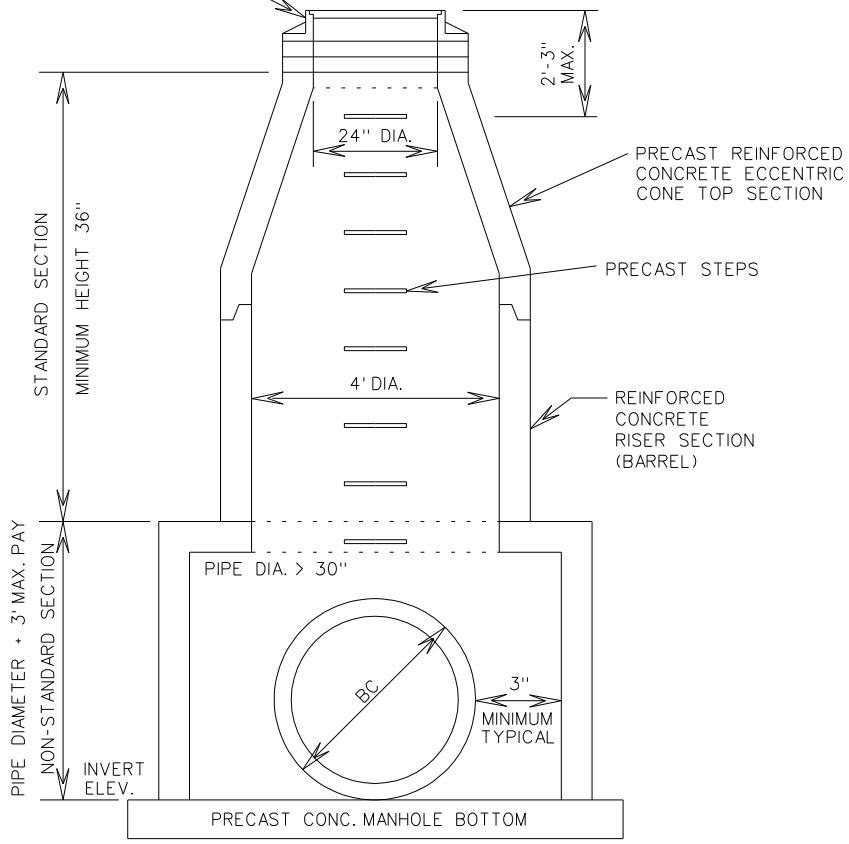

DETAIL OF DEEP MANHOLE

PRECAST MANHOLE BARREL SECTIONS GREATER THAN FOUR FEET IN DIAMETER SHALL MEET ASTM C-76 -67 SPECIFICATIONS.

TOP SLAB TO BE REINFORCED CONCRETE, 8" THICK AS APPROVED BY CITY ENGINEER.

8" THICK PRECAST MANHOLE BOTTOMS FOR PIPE GREATER THAN 36".

FOR CAST IN PLACE WALL SECTIONS, ALL REINFORCING BARS SHALL BE ½" O.C. SPACED 12" ON CENTER, WITH MINIMUM OF 2" COVER PROVIDED.

TO FIND DISTANCE "X"

IF 6" + BC < 4'-6", USE 4'-6" FOR DIST. "X"
IF 6" + BC > 4'-6", USE 6" + BC FOR DIST. "X"

NO SCALE

City of Manitowoc
ENGINEERING DEPARTMENT

Rev. 11/08

FORM NO.
402

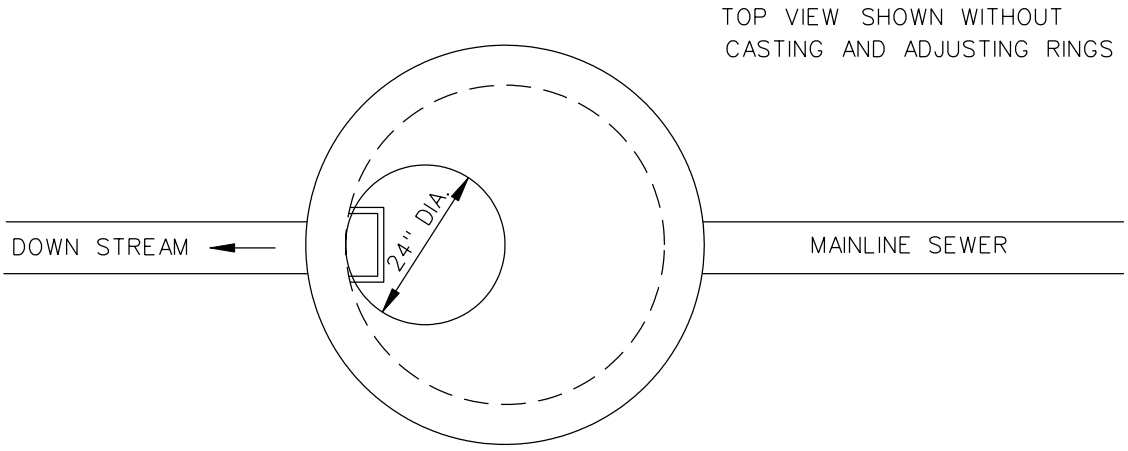

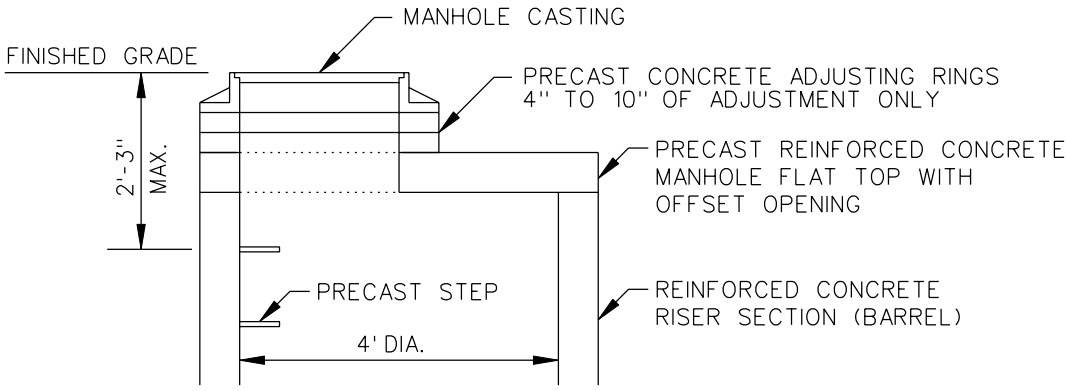

SEE DETAIL 401 & 402 FOR ORIENTATION OF
MANHOLE OPENING AND ADDITIONAL INFORMATION

NO SCALE

FLAT TOP DETAIL FOR TYPE 1 SANITARY & STORM MANHOLES

City of Manitowoc
ENGINEERING DEPARTMENT

Rev. 4/05

FORM NO.
403

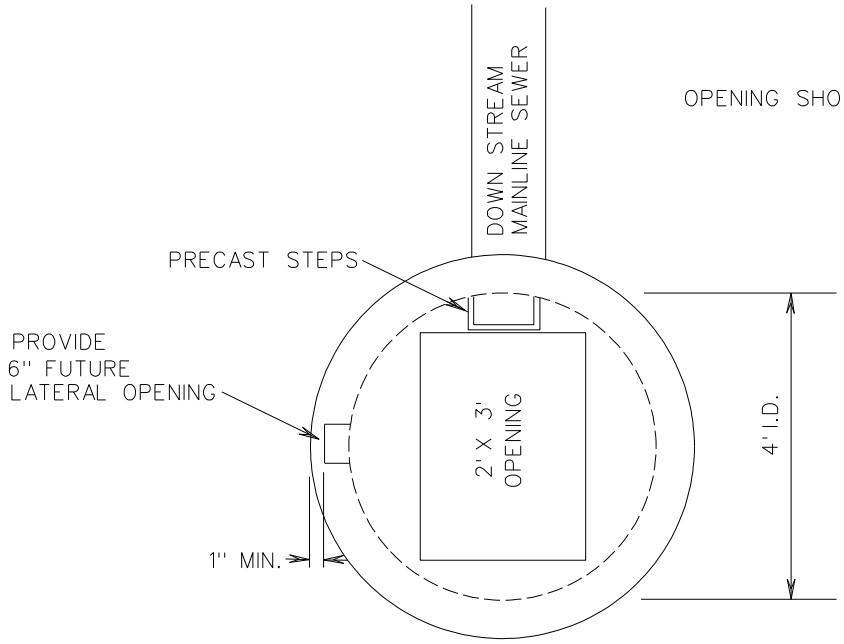

OPENING SHOWN IS FOR AN TYPE "H" CASTING.

TOP VIEW

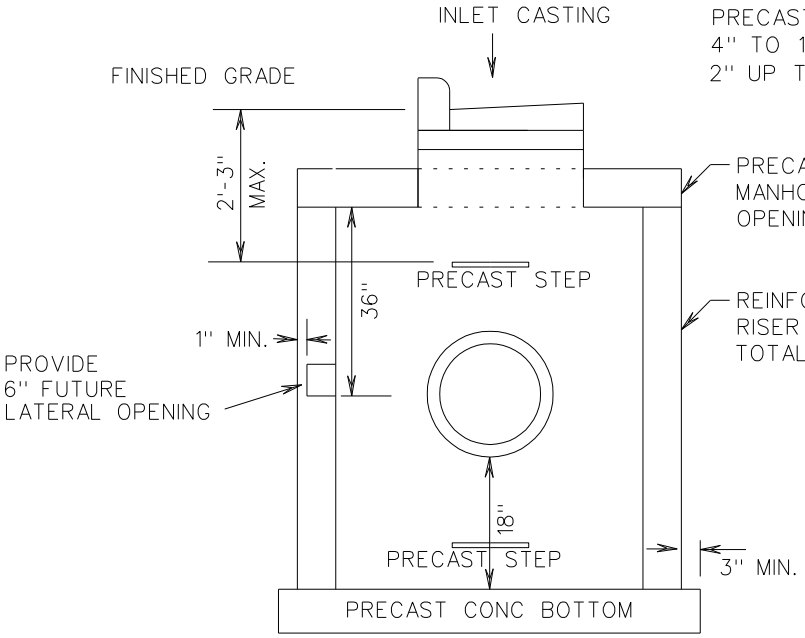

PRECAST CONCRETE ADJUSTING RINGS.
4" TO 10" OF ADJUSTMENT ONLY.
2" UP TO 6" THICK RINGS ALLOWED.

PRECAST REINFORCED CONCRETE
MANHOLE FLAT TOP WITH 2' X 3'
OPENING

REINFORCED CONCRETE
RISER SECTION (BARREL)
TOTAL HEIGHT VARIABLE

SECTION VIEW

NO SCALE

TYPE 4
STORM MANHOLE

City of Manitowoc
ENGINEERING DEPARTMENT

Rev. 6/07

FORM NO.
404

TOP VIEW SHOWN WITHOUT
GRADE RINGS, FRAME & GRATE

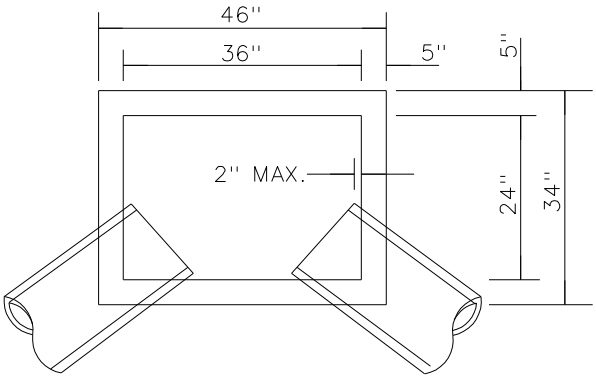

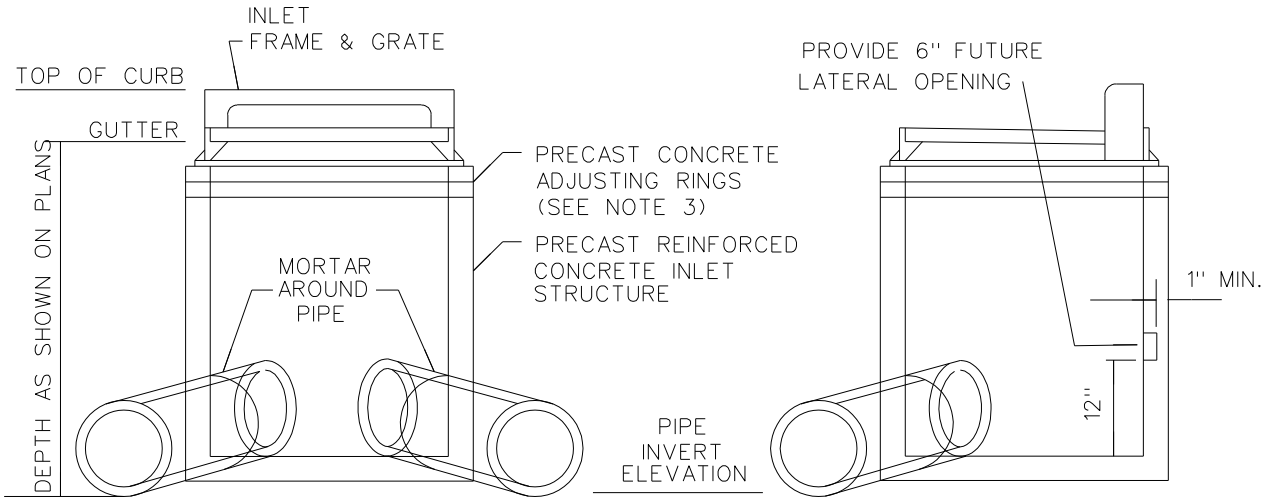

NOTES

1. CATCH BASIN AND INLET STRUCTURES SHALL BE PLACED ON AT LEAST 8" OF BEDDING MATERIAL CONFORMING TO WSWS.8.43.2 FOR DRY SUBGRADE AND WSWS 8.43.6 FOR WET SUBGRADE.

2. CONCRETE AND STEEL REINFORCEMENT SHALL CONFORM TO ASTM C-478 REQUIREMENTS.

3. PRECAST REINFORCED CONCRETE ADJUSTING RINGS SHALL BE USED TO ADJUST THE FRAME TO THE REQUIRED GRADE. A MINIMUM OF 4" A MAXIMUM OF 10" OF ADJUSTING RINGS AND MORTAR SHALL BE USED FOR THE ADJUSTMENT. MORTAR OR FLEXIBLE SEAL SHALL BE 3/8" MINIMUM THICKNESS BETWEEN EACH RING, RING AND STRUCTURE, AND RING AND FRAME. THE THICKNESS OF EACH GRADE RING SHALL RANGE FROM 2" MINIMUM TO 6" MAXIMUM. USE NO MORE THAN TWO (2) OF THE 2" SIZE OF GRADE RINGS PER STRUCTURE. GRADE RINGS SHALL BE REINFORCED WITH AT LEAST ONE RING OF STEEL REBAR CENTERED WITHIN THE RING. SPLIT RINGS ARE NOT ALLOWED.

4. THE HEIGHT OF INDIVIDUAL RISER SECTIONS SHALL BE SELECTED TO MINIMIZE THE NUMBER OF RISER JOINTS LOCATED BETWEEN THE TOP OF THE STRUCTURE AND THE BOTTOM OF THE COLUMN OF GRADE RINGS.

5. THE ENTIRE SPACE BETWEEN THE PIPE LEADS AND THE PRECAST CATCH BASIN OR INLET SHALL BE MORTARED OR CONCRETED IN PLACE BY THE CONTRACTOR. SOLID CONCRETE BRICKS MAY BE USED AS A FILLER.

6. THE FRAME OF THE CATCH BASIN (OR INLET) SHALL NOT EXTEND MORE THAN 1 1/2" BEYOND THE INNER OR OUTER EDGES OF THE CATCH BASIN (OR INLET) STRUCTURE.

NO SCALE

TYPE 3

STANDARD PRECAST INLET

City of Manitowoc
ENGINEERING DEPARTMENT

Rev. 12/07

FORM NO.
405

STANDARD TRENCH SECTION

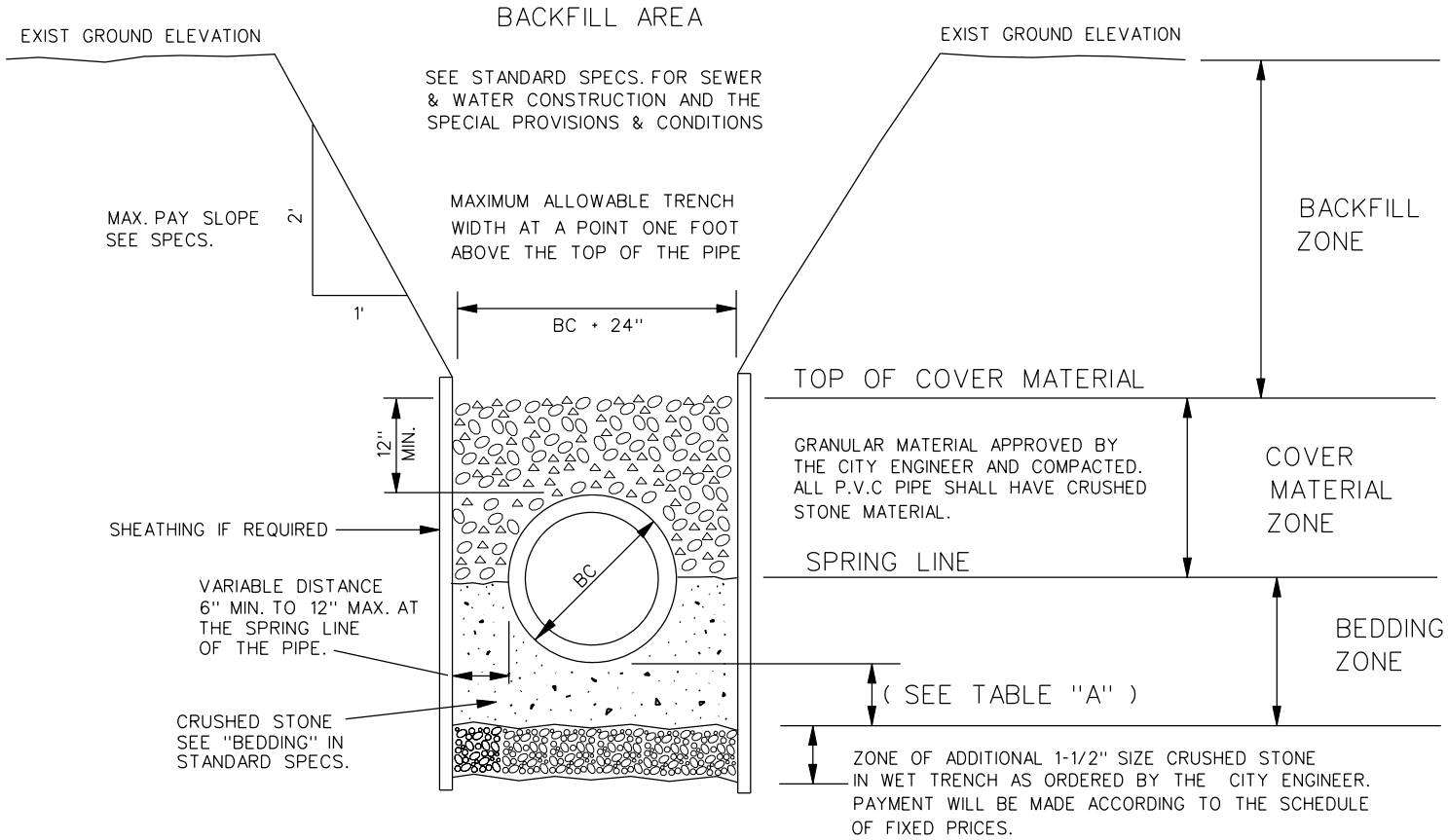

TABLE "A"

PIPE DIAMETER	STONE THICKNESS
24" & OVER	8"
21"	7"
18"	6"
15"	5"
12" & UNDER	4"

TYPICAL SECTION SHOWING
BEDDING AND BACKFILL REQUIREMENTS
FOR SANITARY AND STORM SEWER

NO SCALE

City of Manitowoc
ENGINEERING DEPARTMENT

FORM NO.
406

Rev. 4/05

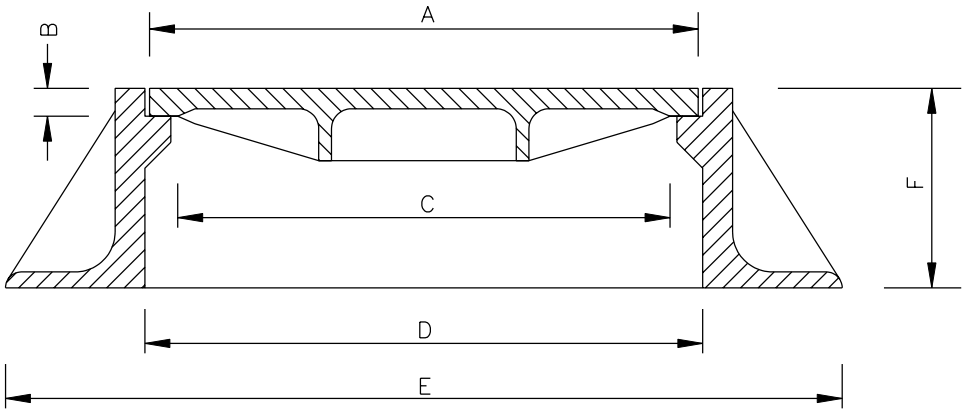

FRAME	COVER	A	B	C	D	E	F
R-1550-A	TYPE"B"	23"	1½"	21"	25½"	36"	9"
R-2050	OPEN GRATE TYPE"C"	23"	1½"	21"	25½"	36"	9"
R-2560-E	BEE-HIVE GRATE	23"	1½"	21"	25½"	36"	9"

STANDARD MANHOLE CASTINGS
R-1550-A

NEENAH FOUNDRY CATALOG "R" 12TH EDITION (1999) OR APPROVED EQUAL.

SANITARY SEWER-MACHINED TO RECEIVE A ¼" T-GASKET. DETAIL PER NEENAH FOUNDRY DRAWING #45512.

TYPE"B" COVER WITH TWO CONCEALED PICK HOLES.

STORM SEWER
NON ROCKING DESIGN TYPE"B" COVER WITH TWO OPEN PICK HOLES.

OPEN GRATE DESIGN R-2050 SHALL BE A TYPE"C" COVER.

BEE-HIVE CASTING & GRATE SHALL BE R-2560-E.

A STANDARD CASTING SHALL BE USED FOR MANHOLES LARGER THAN FOUR FEET IN DIAMETER.

NO SCALE

STANDARD MANHOLE FRAME AND COVER

City of Manitowoc
ENGINEERING DEPARTMENT

Rev. 4/05

FORM NO. 407

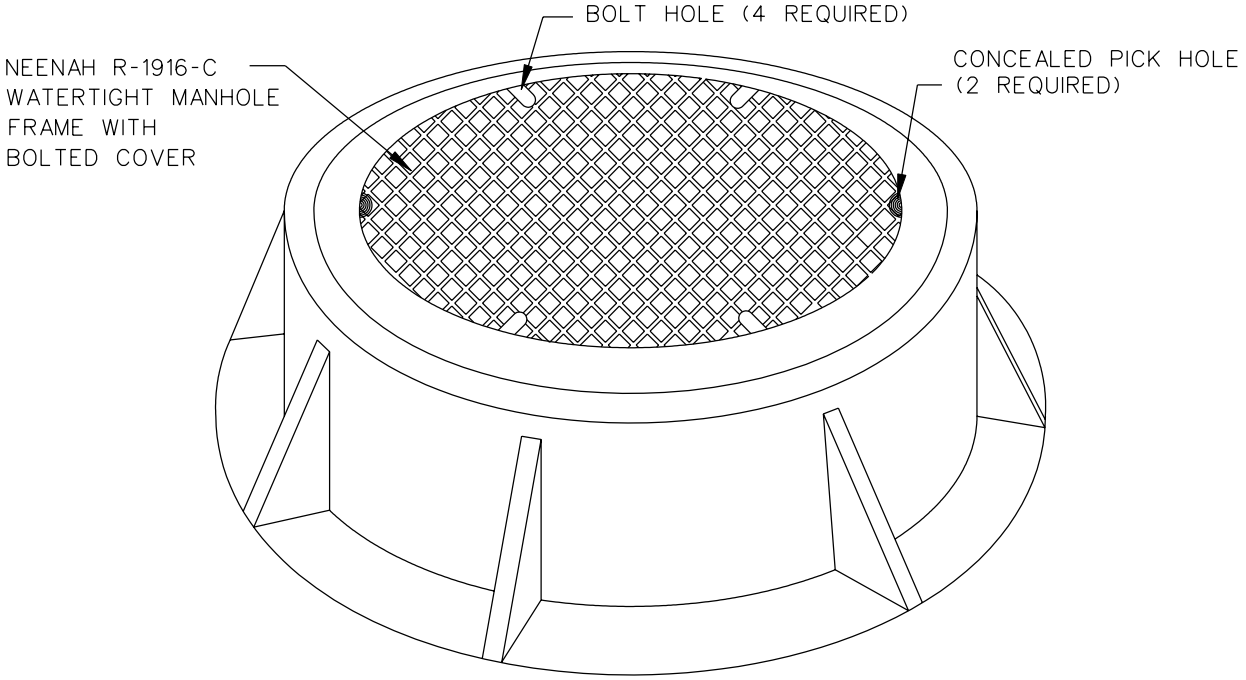

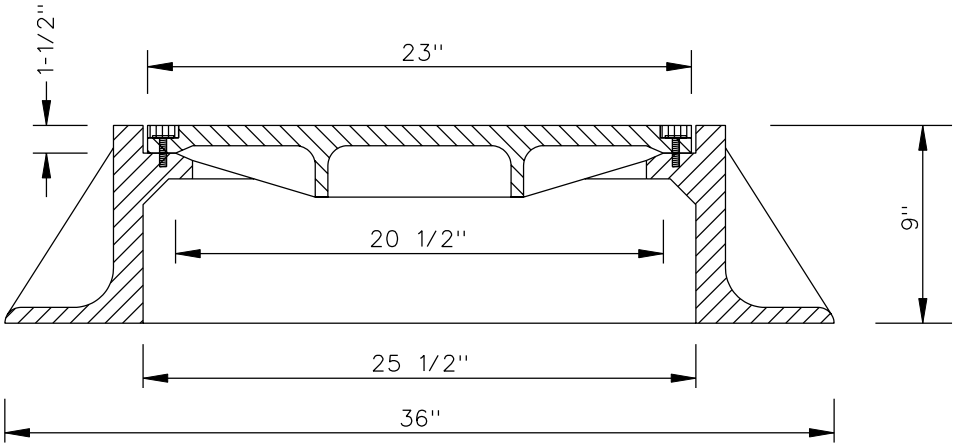

NO SCALE

STANDARD FRAME & COVER FOR SANITARY MANHOLE IN SUBAQUEOUS OR BURIED CONDITIONS

City of Manitowoc
ENGINEERING DEPARTMENT

Rev. 4/05

FORM NO.
408

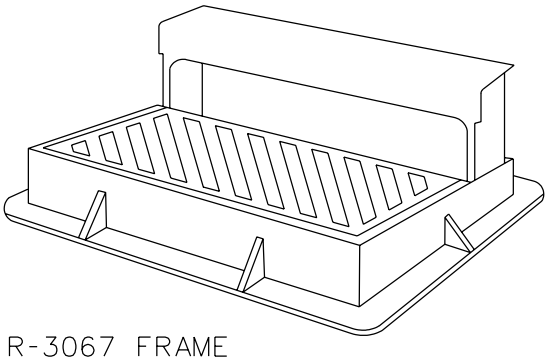

R-3067 FRAME
WITH "R" GRATE

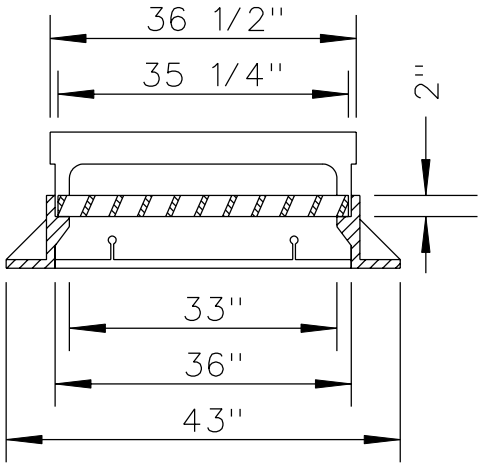

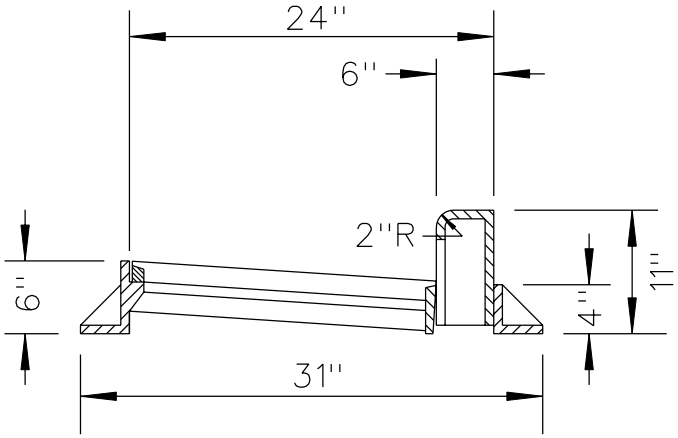

1. NEENAH FRAME & GRATE R-3067-R (DIAGONAL) DIMENSIONED ABOVE SHALL BE USED UNLESS INDICATED OTHERWISE IN THE CONTRACT DOCUMENTS.

NO SCALE

STANDARD FRAME & GRATE FOR CATCH BASINS & INLETS

City of Manitowoc
ENGINEERING DEPARTMENT

Rev. 4/05

FORM NO.
409

NEENAH R-3290-A FRAME & GRATE SHALL BE USED AT CATCH BASINS LOCATED WITHIN DRIVEWAY OPENINGS

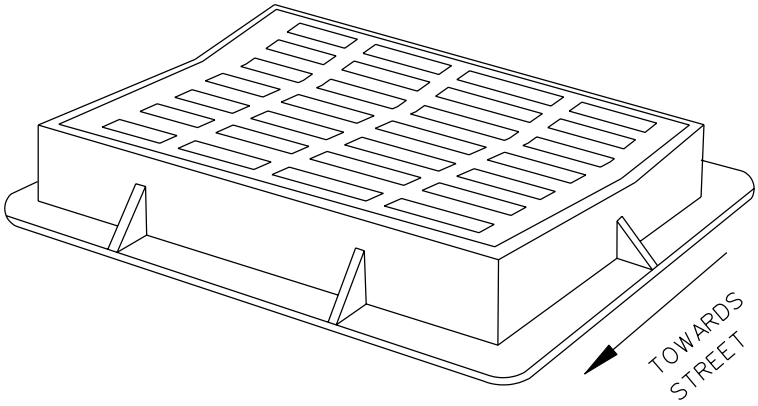

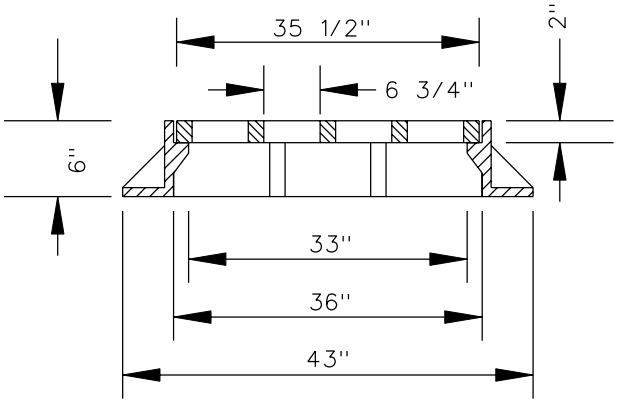

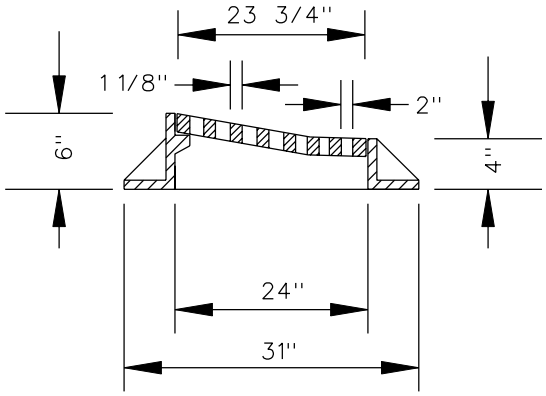

NO SCALE

STANDARD FRAME & GRATE FOR DRIVEWAY CATCH BASINS & INLETS

City of Manitowoc
ENGINEERING DEPARTMENT

Rev. 4/05

FORM NO.
410

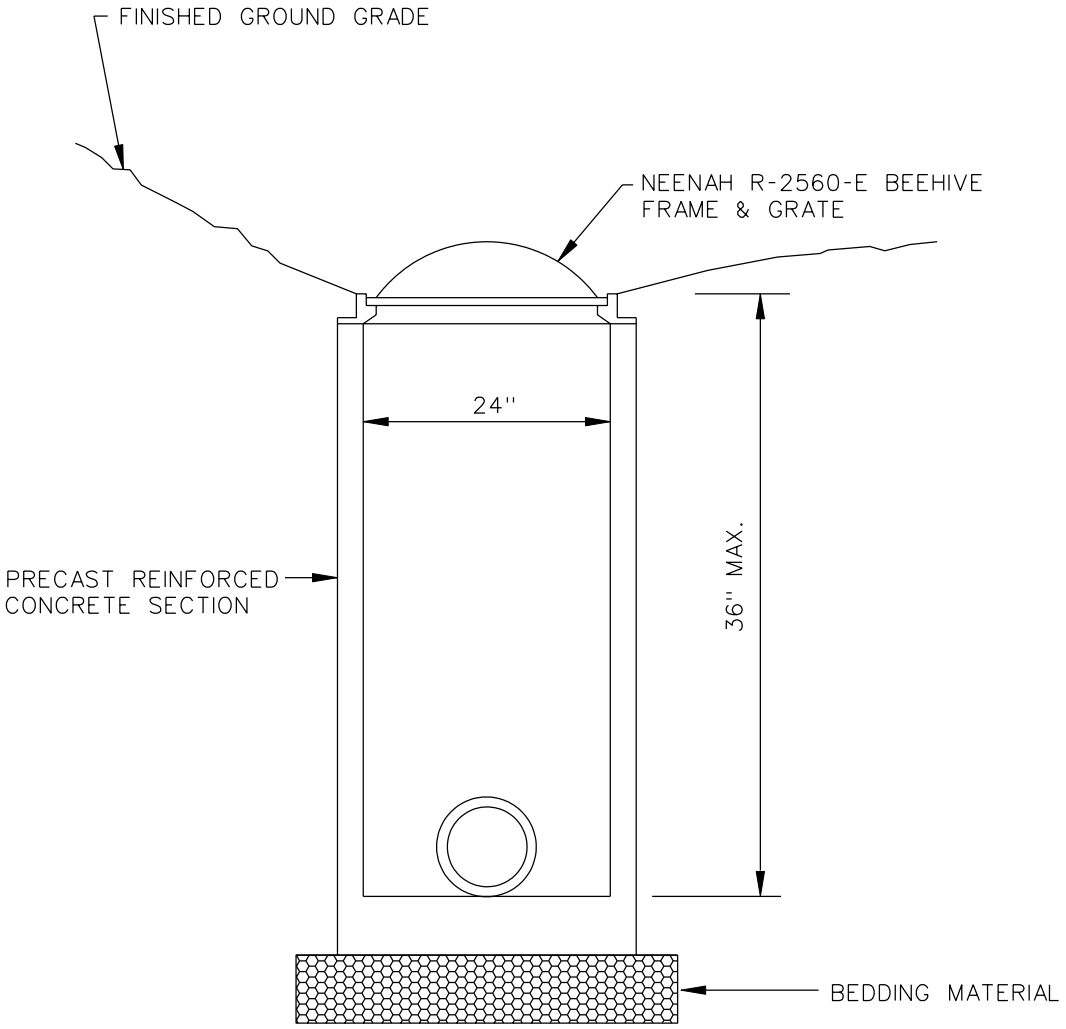

NOTES:

1. THE MAXIMUM DEPTH OF THE STRUCTURE SHALL BE THREE (3') FEET.

NO SCALE

TYPE 1
FIELD CATCH BASIN / INLET

City of Manitowoc
ENGINEERING DEPARTMENT

Rev. 4/05

FORM NO.
411

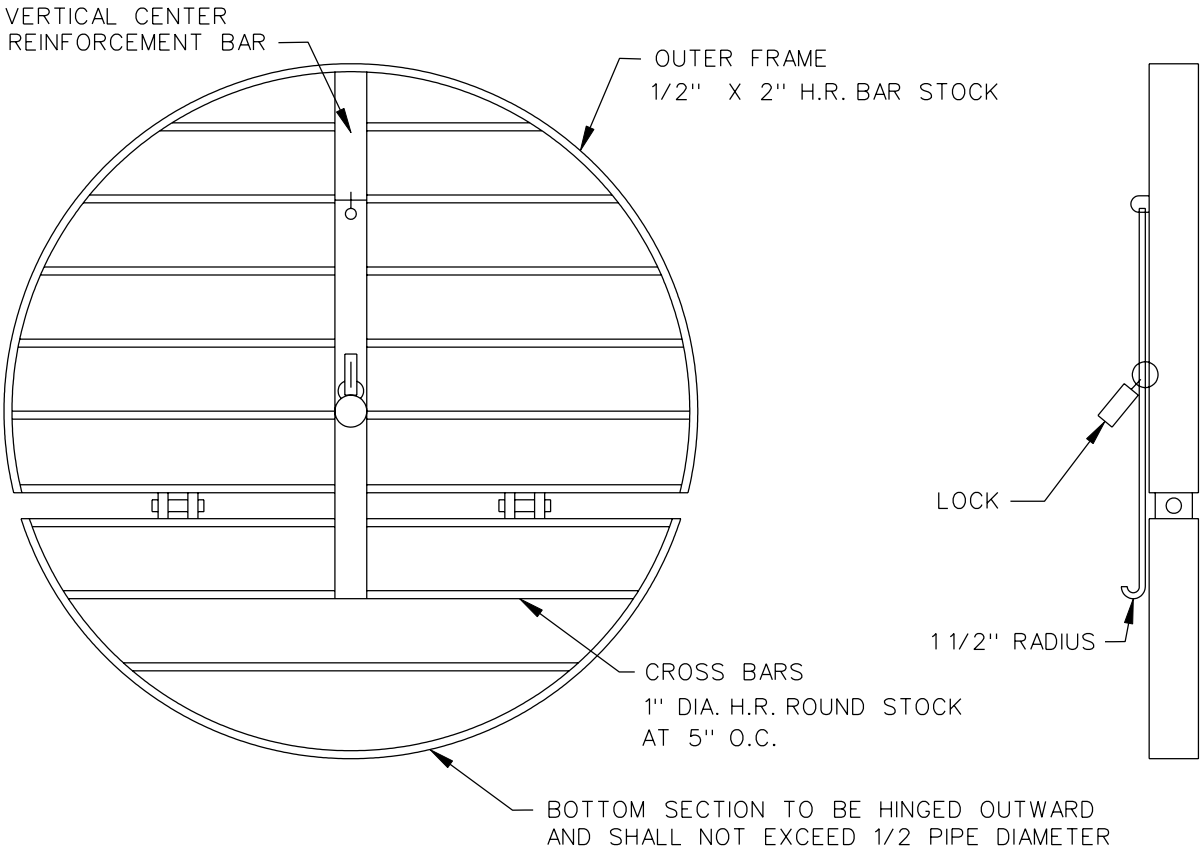

NOTES:

1. HINGED GRATES REQUIRED FOR PIPES OF 24" DIAMETER OR GREATER.

2. GRATE TO BE HELD IN PIPE WITH 4 1/2" GRADE 5 BOLTS.

3. ENTIRE UNIT TO BE PRIMER COATED WITH **RUSTOLEUM GRADE" RED PRIMER.

A VERTICAL HINGED LOCKABLE BAR SHALL BE PROVIDED. THIS LOCKABLE BAR SHALL BE IN ADDITION TO THE VERTICAL REINFORCING BAR REQUIRED FOR GRATES 24" IN DIAMETER OR GREATER. THE END OF THE LOCKABLE BAR SHALL HAVE A 1-1/2" RADIUS, TO PERMIT ITS USE TO RETAIN THE HINGED SECTION OF THE GRATE IN AN OPEN POSITION OF AT LEAST 110 DEGREES. THE LENGTH OF THE BAR SHALL BE BASED ON THE SIZE OF THE GRATE BEING FURNISHED.

NO SCALE

HINGED GRATE FOR STORM SEWER OUTFALLS

City of Manitowoc
ENGINEERING DEPARTMENT

Rev. 4/05

FORM NO.
412

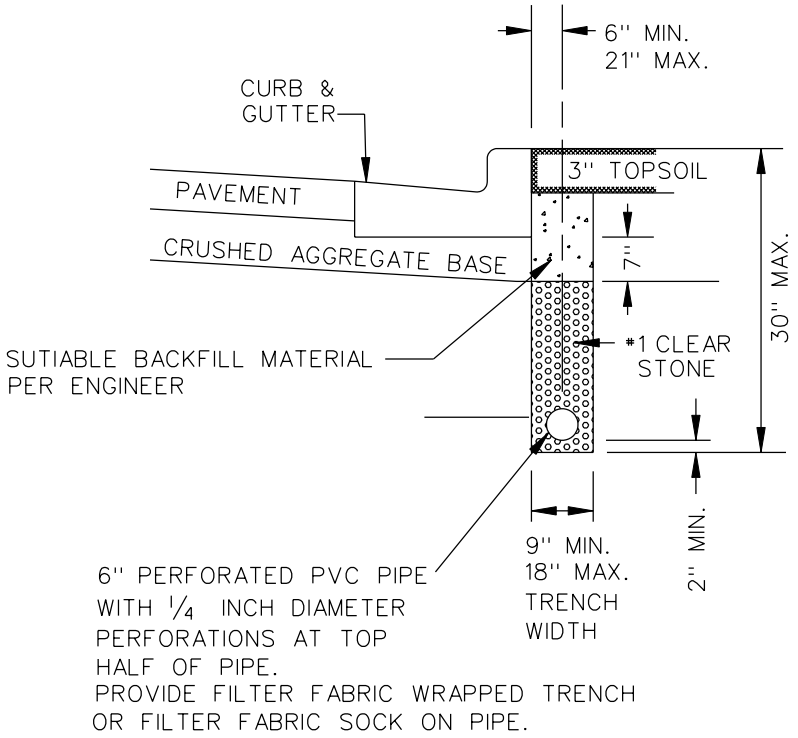

NOTES:

1. 6" PERFORATED PIPE TO BE CONNECTED TO A DOWNSTREAM CATCH BASIN OR INLET.
2. SLOPE ON 6" PIPE TO BE A MINIMUM OF 0.5%.
3. PIPE TO BE 6" PVC OR 6" CORRUGATED HDPE.
4. SUMP PUMP LINES SHALL NOT BE CONNECTED TO UNDERDRAIN PERFORATED PIPE.
5. PROVIDE CLEANOUT RISERS EVERY 300' MAXIMUM SPACING AND AT UPSTREAM END OF PIPE.
6. THE PERFORATED PIPE COULD BE FURNISHED WITH AN FILTER FABRIC SOCK IN LIEU OF THE FILTER FABRIC WRAPPED TRENCH.

NO SCALE

UNDERDRAIN LINES

City of Manitowoc
ENGINEERING DEPARTMENT

Rev. 4/05

FORM NO.
413

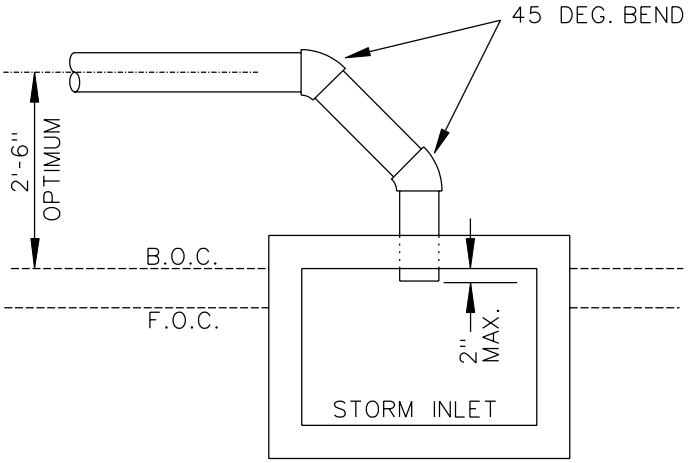

INLET CONNECTION DETAIL

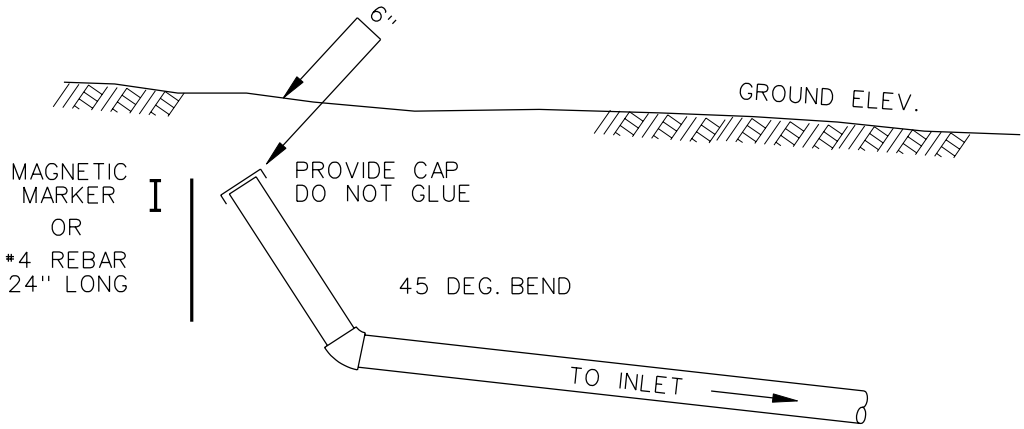

CLEANOUT RISER DETAIL

NOTES:

1. 6" PIPE TO BE CONNECTED TO A DOWNSTREAM CATCH BASIN OR INLET.
2. SLOPE ON 6" PIPE TO BE A MINIMUM OF 0.5%.
3. PIPE TO BE 6" PVC (SDR-35)
4. 6" INLINE WYES OR TEES REQUIRED FOR NEW CONSTRUCTION.
5. PROVIDE CLEANOUT RISERS EVERY 300' MAXIMUM SPACING AND AT UPSTREAM END OF PIPE.
6. INLET CONNECTION TO BE 12" ABOVE DISCHARGE PIPE.

NO SCALE

STORM LATERAL INLET CONNECTION
STORM CLEANOUT DETAIL

City of Manitowoc
ENGINEERING DEPARTMENT

Rev. 4/05

FORM NO.
414

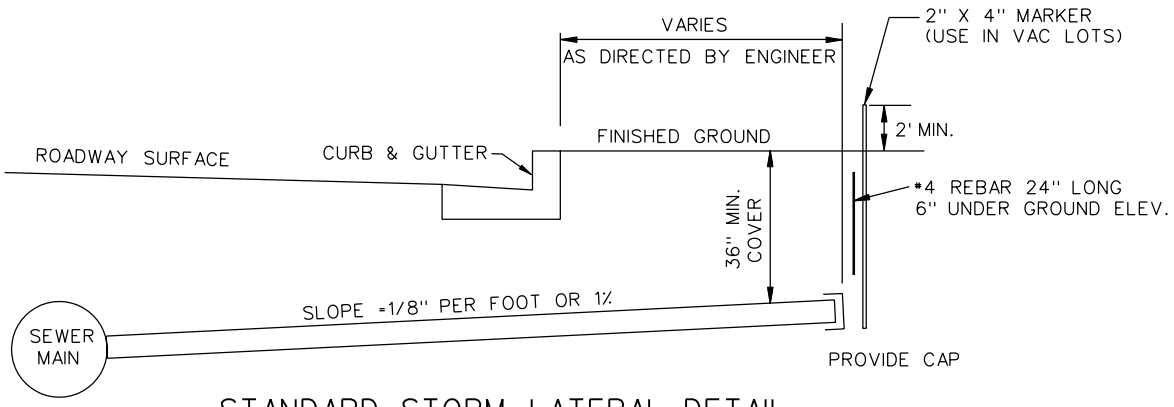

STANDARD STORM LATERAL DETAIL

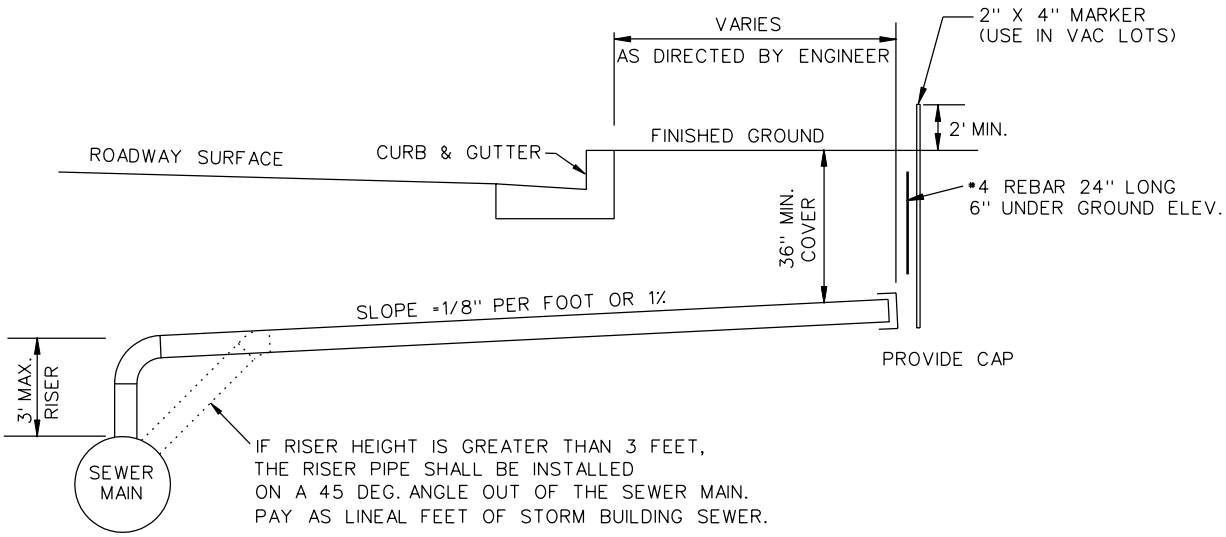

STORM RISER DETAIL

1. ALL STORM LATERALS TO BE 6" PVC (SDR-35)
2. ALL WYES OR TEES SHALL BE INLINE FOR NEW CONSTRUCTION. SADDLES CAN BE USED WHEN SEWER MAIN IS EXISTING.
3. ALL STORM LATERALS TO BE LAID AT 1.0% MINIMUM.

NO SCALE

TYPICAL STORM BUILDING LATERAL

City of Manitowoc
ENGINEERING DEPARTMENT

Rev. 4/05

FORM NO. 415

PAVEMENT SAW CUTTING FOR TRENCH RESTORATION

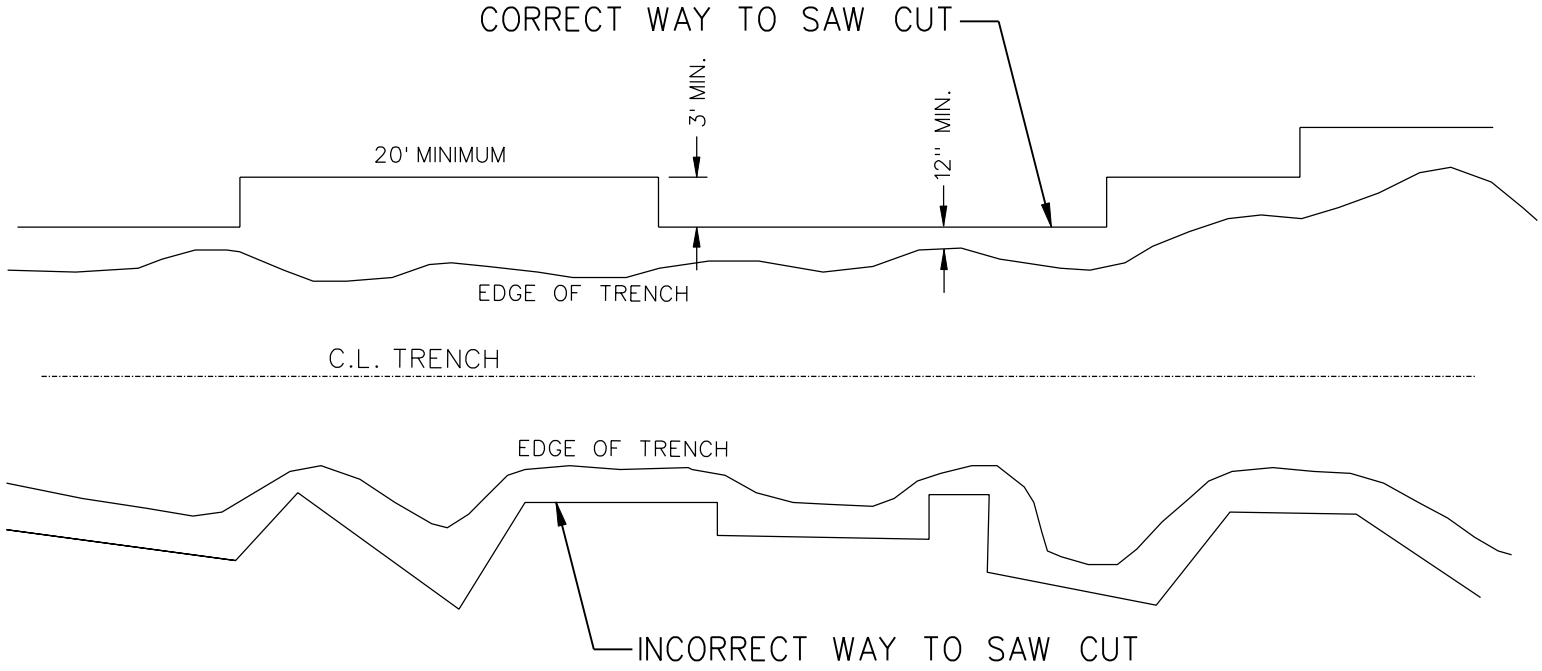

WHEN SAW CUTTING THE PAVEMENT FOR TRENCH RESTORATION, ALL SAW CUTS SHALL BE MADE PARALLEL OR PERPENDICULAR TO THE CENTERLINE OF THE TRENCH.
PARALLEL CUTS SHALL BE A MINIMUM LENGTH OF 20 FEET
AND PERPENDICULAR CUTS SHALL BE A MINIMUM OF 3 FEET IN LENGTH.

NO SCALE

City of Manitowoc
ENGINEERING DEPARTMENT

FORM NO.
416

Rev. 4/05

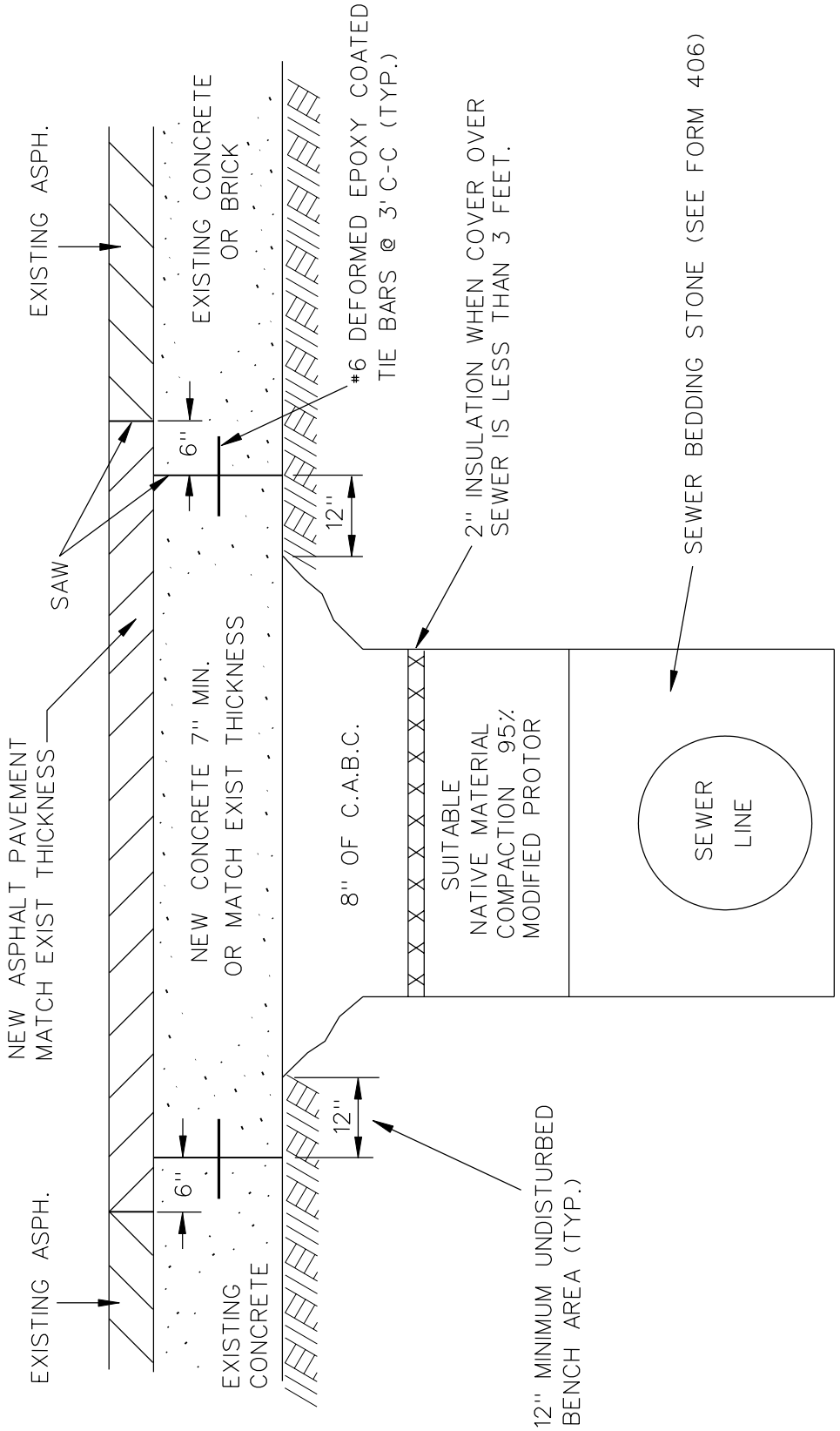

WHEN SAW CUTTING THE PAVEMENT FOR TRENCH RESTORATION, ALL SAW CUTS SHALL BE MADE PARALLEL OR PERPENDICULAR TO THE CENTERLINE OF THE TRENCH.

PARALLEL CUTS SHALL BE A MINIMUM LENGTH OF 20 FEET AND PERPENDICULAR CUTS SHALL BE A MINIMUM OF 3 FEET IN LENGTH. (SEE FORM 416)

NO SCALE

UTILITY TRENCH RESTORATION FOR CONCRETE , RESURFACED CONCRETE OR BRICK PAVEMENTS

City of Manitowoc
ENGINEERING DEPARTMENT

Rev. 4/05

FORM NO. 417

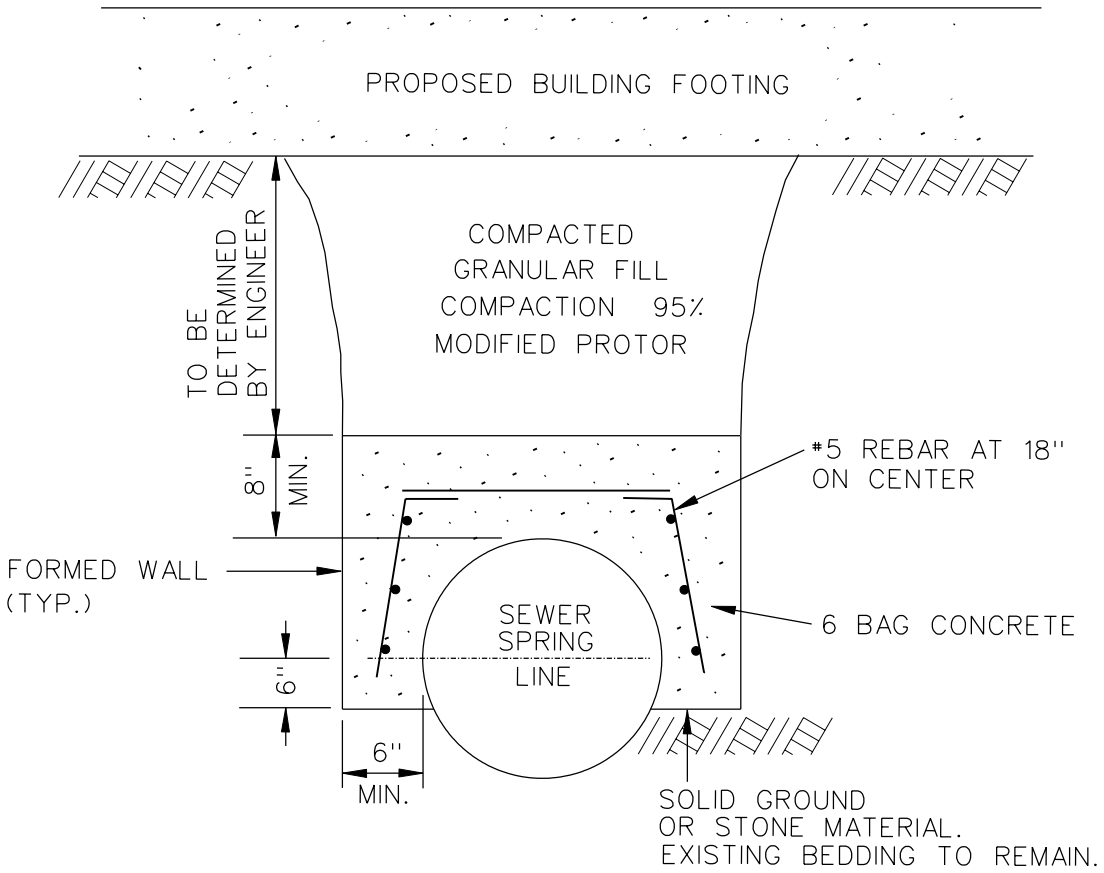

EXTEND THE CAP A MINIMUM OF 10 FEET PAST THE OUTSIDE OF BUILDING WALLS.

NO SCALE

TYPICAL CONCRETE CAP OVER SEWER PIPE

City of Manitowoc
ENGINEERING DEPARTMENT

Rev. 4/05

FORM NO. 418

* PIPE DIA.	L
8"-27"	10'
30"-48"	15'
> 48"	25'

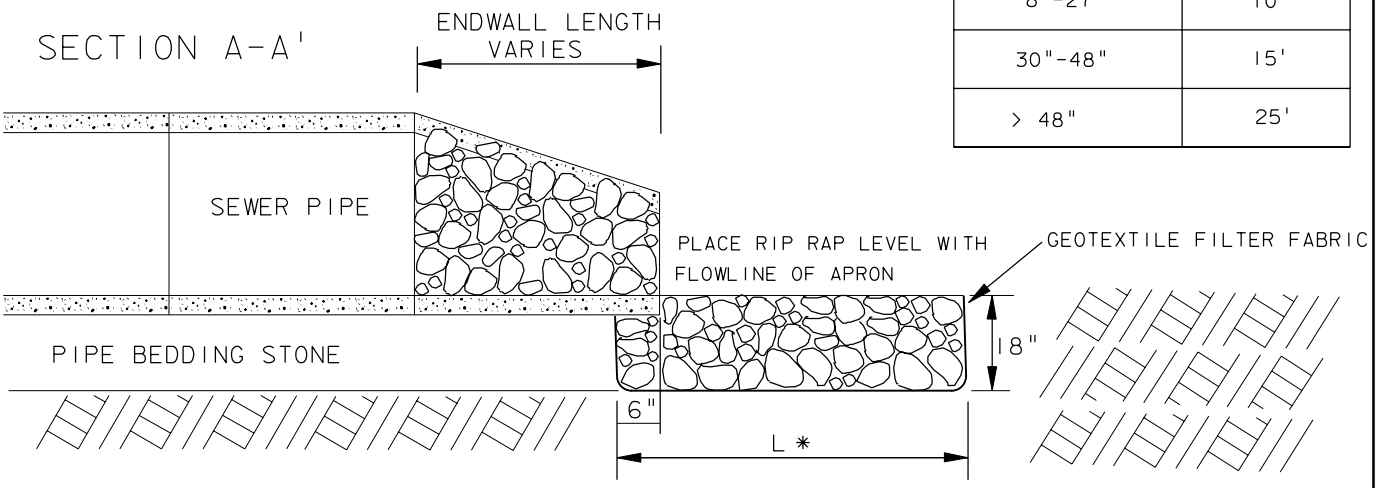

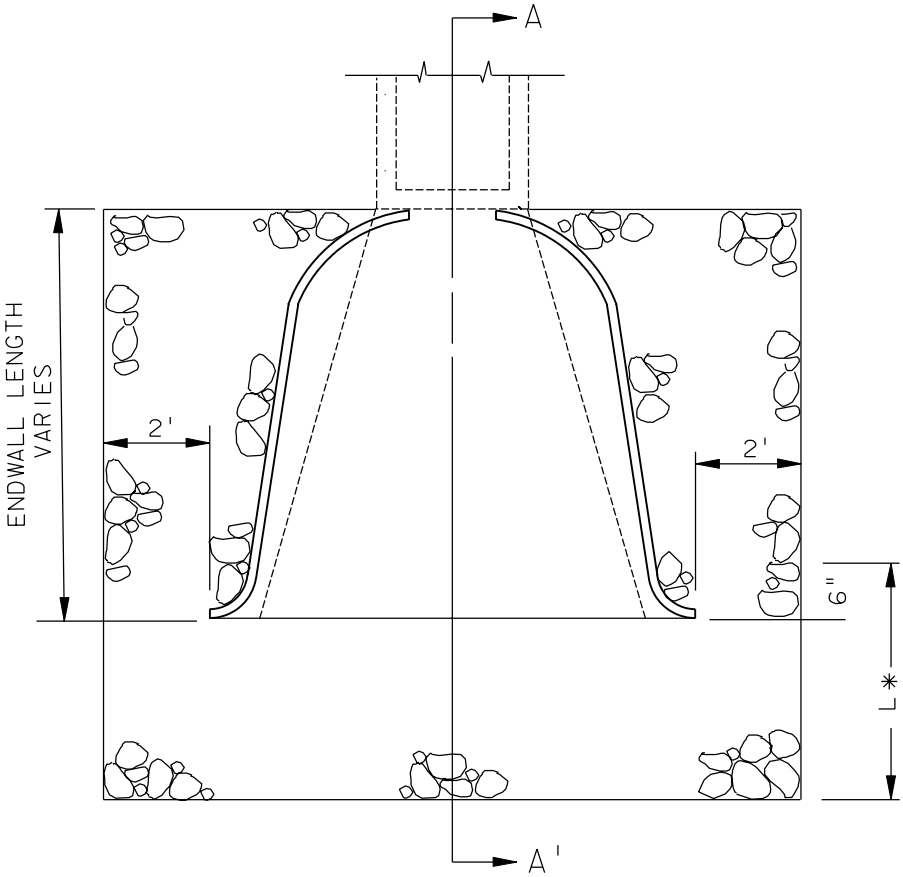

MEDIUM/HEAVY RANDOM RIPRAP
WITH FILTER FABRIC AT STORM OUTFALLS
(CONCRETE OR C.M.P. ENDWALL)

NO SCALE

RIP RAP DETAIL AT STORM OUTFALLS

City of Manitowoc
ENGINEERING DEPARTMENT

Rev. 4/05

FORM NO. 419

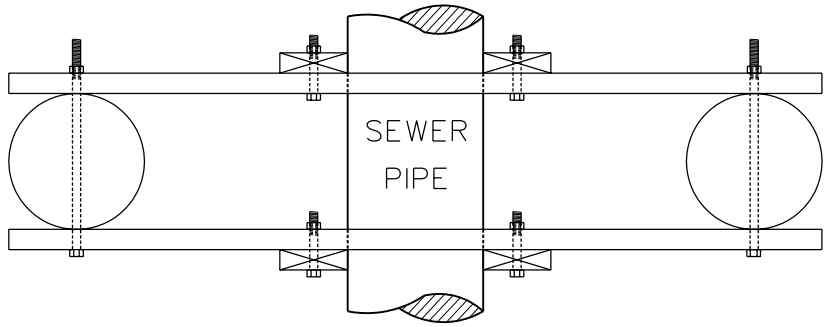

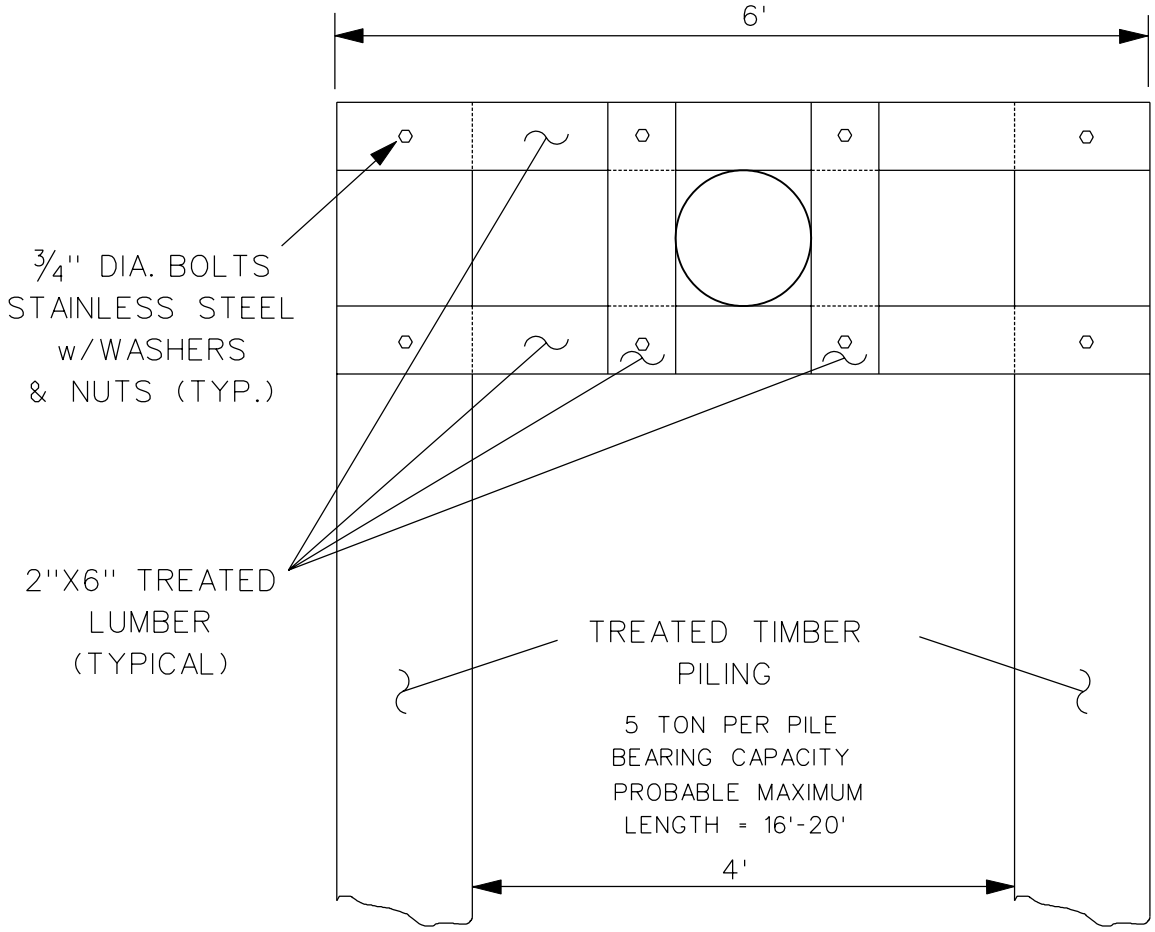

NO SCALE

SEWER PILING DETAIL

City of Manitowoc
ENGINEERING DEPARTMENT

Rev. 4/05

FORM NO.
420

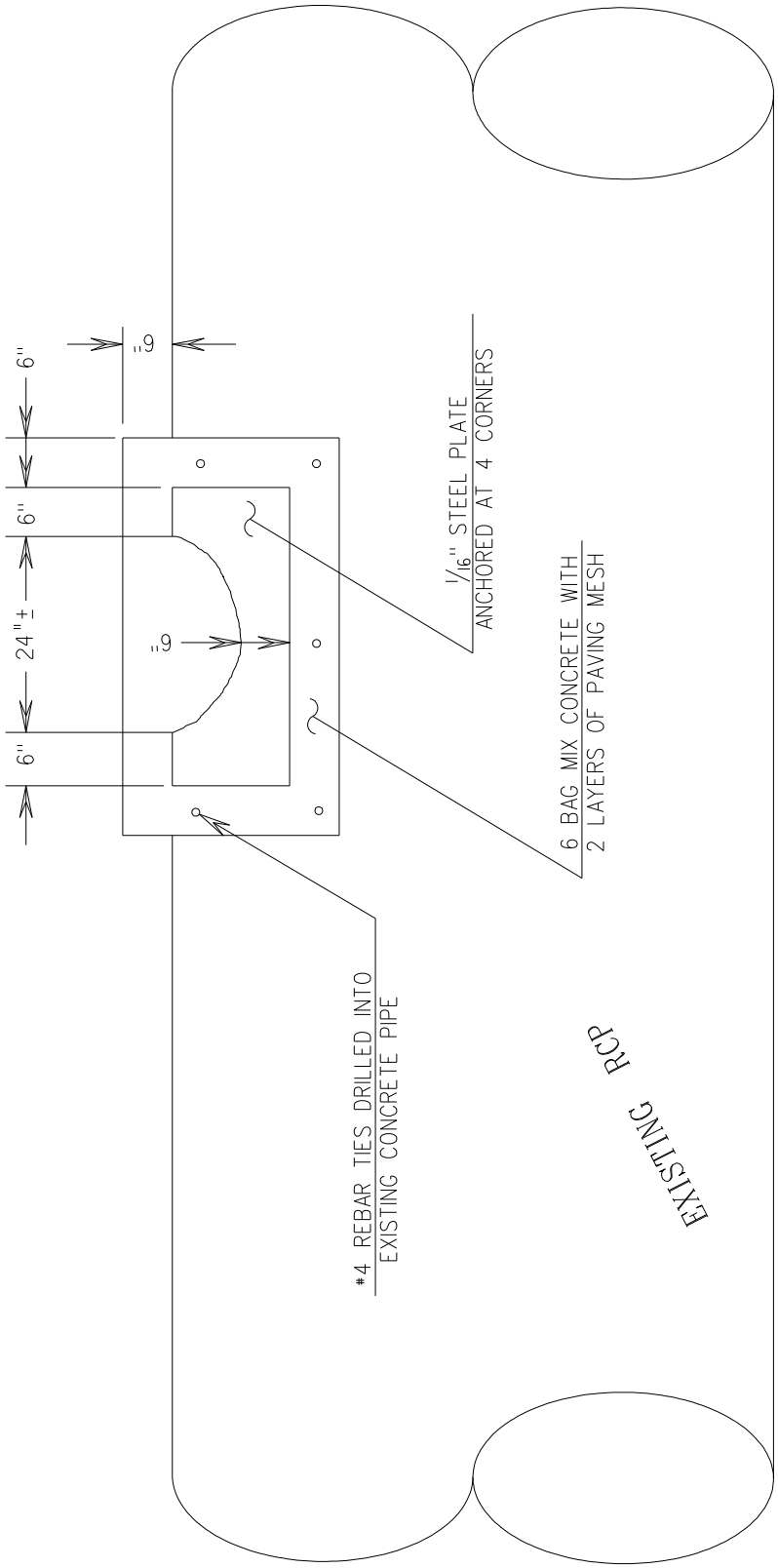

NO SCALE

MANHOLE PIPE REPAIR

City of Manitowoc
ENGINEERING DEPARTMENT

Rev. 4/05

FORM NO.
421

TOP VIEW SHOWN WITHOUT
GRADE RINGS, FRAME & GRATE

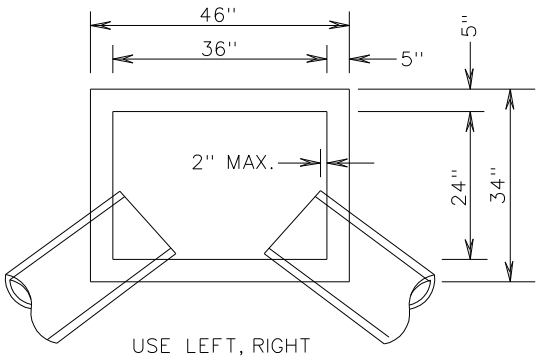

USE LEFT, RIGHT
OR CENTERED PIPE
OPENING AS PER PLANS

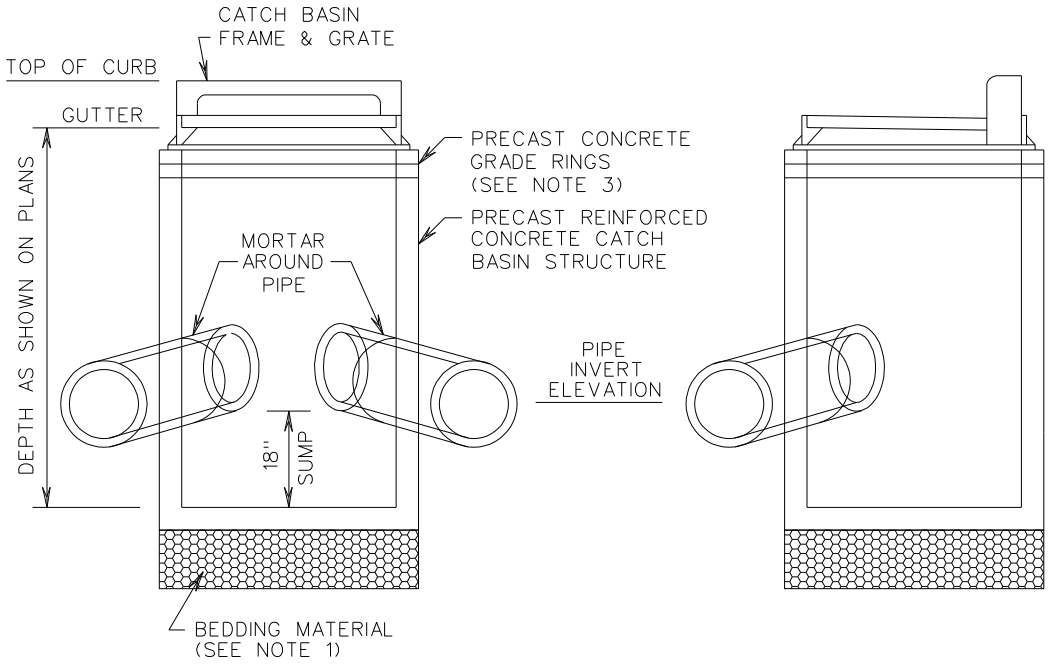

NOTES

1. CATCH BASIN AND INLET STRUCTURES SHALL BE PLACED ON AT LEAST 8" OF BEDDING MATERIAL CONFORMING TO WSWS.8.43.2 FOR DRY SUBGRADE AND WSWS 8.43.6 FOR WET SUBGRADE.

2. CONCRETE AND STEEL REINFORCEMENT SHALL CONFORM TO ASTM C-478 REQUIREMENTS.

3. PRECAST REINFORCED CONCRETE ADJUSTING RINGS SHALL BE USED TO ADJUST THE FRAME TO THE REQUIRED GRADE. A MINIMUM OF 4" A MAXIMUM OF 10" OF ADJUSTING RINGS AND MORTAR SHALL BE USED FOR THE ADJUSTMENT. MORTAR OR FLEXIBLE SEAL SHALL BE 3/8" MINIMUM THICKNESS BETWEEN EACH RING, RING AND STRUCTURE, AND RING AND FRAME. THE THICKNESS OF EACH GRADE RING SHALL RANGE FROM 2" MINIMUM TO 6" MAXIMUM. USE NO MORE THAN TWO (2) OF THE 2" SIZE OF GRADE RINGS PER STRUCTURE. GRADE RINGS SHALL BE REINFORCED WITH AT LEAST ONE RING OF STEEL REBAR CENTERED WITHIN THE RING. SPLIT RINGS ARE NOT ALLOWED.

4. THE HEIGHT OF INDIVIDUAL RISER SECTIONS SHALL BE SELECTED TO MINIMIZE THE NUMBER OF RISER JOINTS LOCATED BETWEEN THE TOP OF THE STRUCTURE AND THE BOTTOM OF THE COLUMN OF GRADE RINGS.

5. THE ENTIRE SPACE BETWEEN THE PIPE LEADS AND THE PRECAST CATCH BASIN OR INLET SHALL BE MORTARED OR CONCRETED IN PLACE BY THE CONTRACTOR. SOLID CONCRETE BRICKS MAY BE USED AS A FILLER.

6. THE FRAME OF THE CATCH BASIN (OR INLET) SHALL NOT EXTEND MORE THAN 1 1/2" BEYOND THE INNER OR OUTER EDGES OF THE CATCH BASIN (OR INLET) STRUCTURE.

NO SCALE

TYPE 3
STANDARD PRECAST CATCH BASIN
(SUMP)

City of Manitowoc
ENGINEERING DEPARTMENT

Rev. 7/07

FORM NO.
422

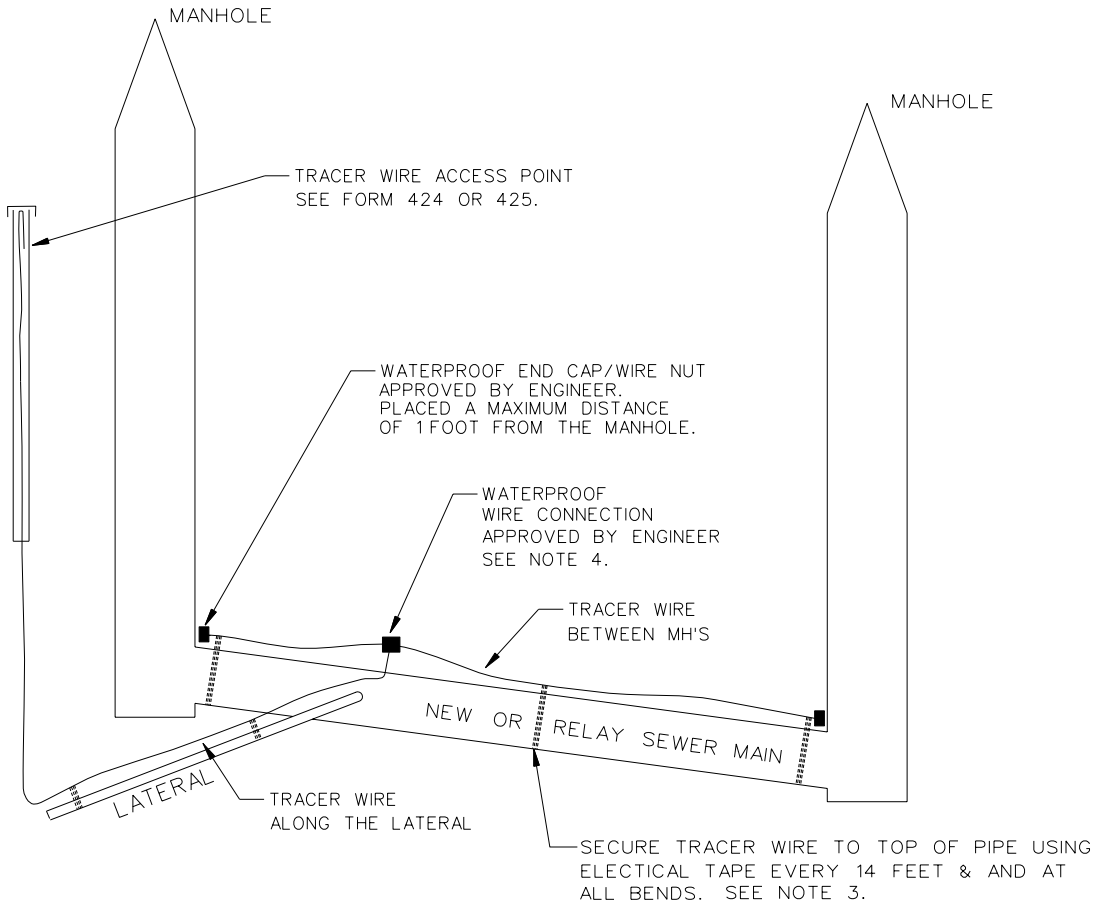

1. TRACER WIRE SHALL BE 12 GAUGE (TYPE THWN OR THHN) SOLID COPPER WIRE WITH A PLASTIC CORROSION PROTECTIVE COATING.
2. WIRE COLORING SHALL BE BLUE FOR WATER, GREEN FOR SANITARY AND BROWN FOR STORM.
3. TRACER WIRE SHALL BE STRAPPED TO THE TOP OF THE PIPE WALL BY MEANS OF A MINIMUM OF TWO COMPLETE WRAPS OF ELECTRICAL TAPE AT INTERVALS OF A MAXIMUM OF 14 FEET AND AT ALL BENDS. THE WIRES SHALL HAVE SOME SLACK TO ALLOW FOR BENDS IN LAYING OF THE PIPING.
4. IF SPLICING IS REQUIRED THE USE OF A DIRECT BURY, WATERPROOF SPLICE KIT (3M SCOTCHLOK 562 WITH SCOTCHLOCK TAPE 33 AND SCOTCH COAT, OR EQUIVALENT) IS REQUIRED. A WATERPROOF WIRE NUT, SIZED ACCORDING TO WIRE SIZE AND THE NUMBER OF CONDUCTORS (IDEAL TWISTER DB PLUS OR EQUIVALENT) IS ALSO ACCEPTABLE. THE CONTRACTOR SHALL SUBMIT PRODUCT TO ENGINEER FOR APPROVAL.
5. WHEN STORM AND SANITARY LATERALS ARE INSTALLED IN THE SAME TRENCH, INDIVIDUAL CORRESPONDING TRACING WIRES ARE REQUIRED.
6. TO PRESERVE CONTINUITY, IF A TRACER WIRE IS DAMAGED OR SEVERED, IT SHALL BE REPAIRED OR REPLACED IMMEDIATELY. SEE NOTE 4.
7. PROOF OF CONTINUITY SHALL BE REQUIRED UPON INSTALLATION, REPAIR OR REPLACEMENT OF TRACER WIRE.
8. FOR PROTECTION AGAINST DAMAGE , THE TRACER WIRE(S), SHALL EXTEND TO DAYLIGHT THROUGH A 1" PVC SCHEDULE 40 CONDUIT WITH ACCESS THROUGH A REMOVABLE THREADED GALVANIZED METAL CAP. SEE. FORM 424 OR 425.

NO SCALE

TRACER WIRE DESIGN FOR NEW OR RELAY SEWER CONSTRUCTION

City of Manitowoc
ENGINEERING DEPARTMENT

Rev. 2/07

FORM NO. 423

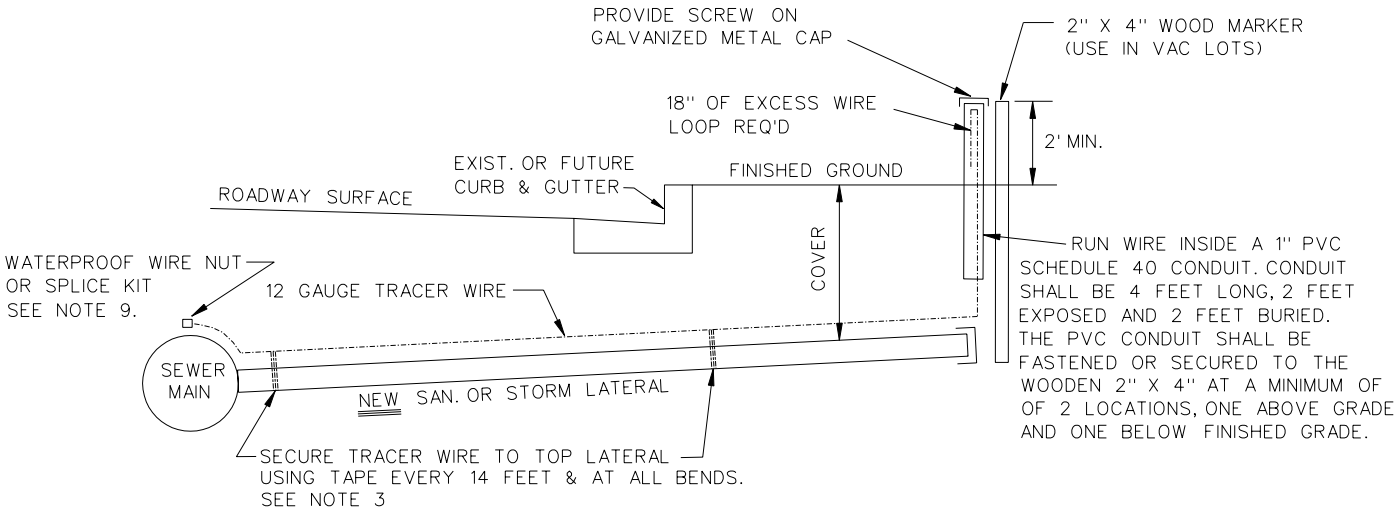

STANDARD TRACER WIRE DETAIL FOR STORM AND SANITARY LATERALS WITHIN THE STREET R/W OR UTILITY EASEMENT, INSTALLED IN NEW SUBDIVISIONS OR VACANT LOTS.

1. TRACER WIRE SHALL BE 12 GAUGE (TYPE THWN OR THHN) SOLID COPPER WIRE WITH A PLASTIC CORROSION PROTECTIVE COATING.
2. WIRE COLORING SHALL BE BLUE FOR WATER, GREEN FOR SANITARY AND BROWN FOR STORM.
3. TRACER WIRE SHALL BE STRAPPED TO THE TOP OF THE PIPE WALL BY MEANS OF A MINIMUM OF TWO COMPLETE WRAPS OF ELECTRICAL TAPE AT INTERVALS OF A MAXIMUM OF 14 FEET AND AT ALL BENDS. THE WIRES SHALL HAVE SOME SLACK TO ALLOW FOR BENDS IN LAYING OF THE PIPING.
4. IF SPLICING IS REQUIRED THE USE OF A DIRECT BURY, WATERPROOF SPLICE KIT (3M SCOTCHLOK 562 WITH SCOTCHLOCK TAPE 33 AND SCOTCH COAT, OR EQUIVALENT) IS REQUIRED. A WATERPROOF WIRE NUT, SIZED ACCORDING TO WIRE SIZE AND THE NUMBER OF CONDUCTORS (IDEAL TWISTER DB PLUS OR EQUIVALENT) IS ALSO ACCEPTABLE. THE CONTRACTOR SHALL SUBMIT PRODUCT TO ENGINEER FOR APPROVAL.
5. WHEN STORM AND SANITARY LATERALS ARE INSTALLED IN THE SAME TRENCH, INDIVIDUAL CORRESPONDING TRACING WIRES ARE REQUIRED.
6. TO PRESERVE CONTINUITY, IF A TRACER WIRE IS DAMAGED OR SEVERED, IT SHALL BE REPAIRED OR REPLACED IMMEDIATELY. SEE NOTE 4.
7. PROOF OF CONTINUITY SHALL BE REQUIRED UPON INSTALLATION, REPAIR OR REPLACEMENT OF TRACER WIRE.
8. FOR PROTECTION AGAINST DAMAGE , THE TRACER WIRE(S), SHALL EXTEND TO DAYLIGHT THROUGH A 1" PVC SCHEDULE 40 CONDUIT WITH ACCESS THROUGH A REMOVABLE THREADED GALVANIZED METAL CAP.
9. IF THE SEWER MAIN DOES HAVE A TRACER WIRE INSTALLED, SPLICE LATERAL WIRE TO THE MAIN WIRE USING A WATERPROOF SPLICE KIT OR WATERPROOF WIRE NUT. IF THE SEWER MAIN DOES NOT HAVE A TRACER WIRE, TERMINATE LATERAL WIRE AT THE SEWER MAIN AND INSTALL A WATERPROOF END CAP/ WIRE NUT.

NO SCALE

TRACER WIRE DETAIL FOR NEW BUILDING LATERALS IN NEW SUBDIVISIONS OR VACANT LOTS	City of Manitowoc ENGINEERING DEPARTMENT	
	Rev. 4/05	FORM NO. 424

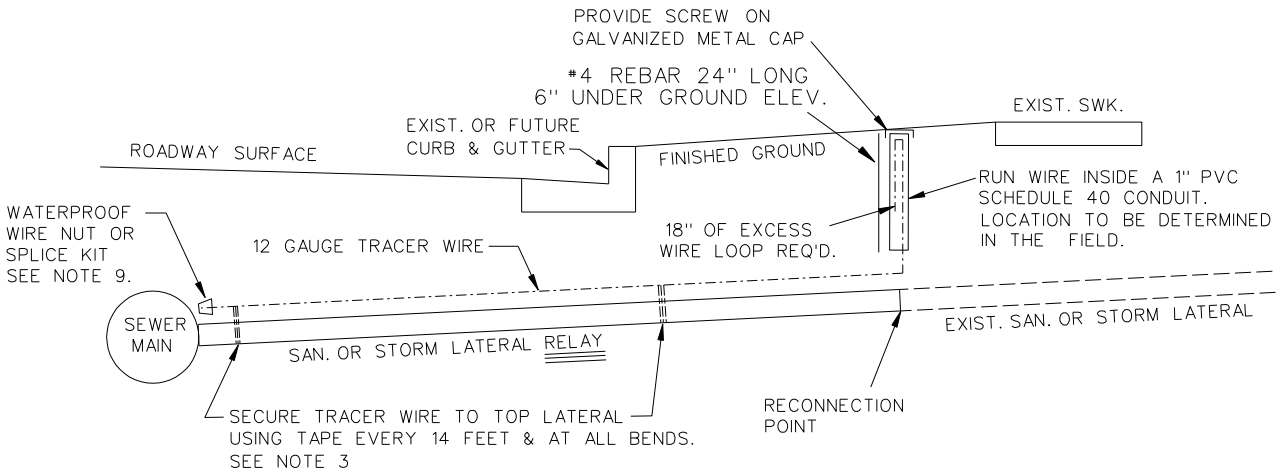

STANDARD TRACER WIRE DETAIL FOR RELAYING OF STORM AND SANITARY LATERALS WITHIN THE STREET R/W OR UTILITY EASEMENT.

1. TRACER WIRE SHALL BE 12 GAUGE (TYPE THWN OR THHN) SOLID COPPER WIRE WITH A PLASTIC CORROSION PROTECTIVE COATING.
2. WIRE COLORING SHALL BE BLUE FOR WATER, GREEN FOR SANITARY AND BROWN FOR STORM.
3. TRACER WIRE SHALL BE STRAPPED TO THE TOP OF THE PIPE WALL BY MEANS OF A MINIMUM OF TWO COMPLETE WRAPS OF ELECTRICAL TAPE AT INTERVALS OF A MAXIMUM OF 14 FEET AND AT ALL BENDS. THE WIRES SHALL HAVE SOME SLACK TO ALLOW FOR BENDS IN LAYING OF THE PIPING.
4. IF SPLICING IS REQUIRED THE USE OF A DIRECT BURY, WATERPROOF SPLICE KIT (3M SCOTCHLOK 562 WITH SCOTCHLOCK TAPE 33 AND SCOTCH COAT, OR EQUIVALENT) IS REQUIRED. A WATERPROOF WIRE NUT, SIZED ACCORDING TO WIRE SIZE AND THE NUMBER OF CONDUCTORS (IDEAL TWISTER DB PLUS OR EQUIVALENT) IS ALSO ACCEPTABLE. THE CONTRACTOR SHALL SUBMIT PRODUCT TO ENGINEER FOR APPROVAL.
5. WHEN STORM AND SANITARY LATERALS ARE INSTALLED IN THE SAME TRENCH, INDIVIDUAL CORRESPONDING TRACING WIRES ARE REQUIRED.
6. TO PRESERVE CONTINUITY, IF A TRACER WIRE IS DAMAGED OR SEVERED, IT SHALL BE REPAIRED OR REPLACED IMMEDIATELY. SEE NOTE 4.
7. PROOF OF CONTINUITY SHALL BE REQUIRED UPON INSTALLATION, REPAIR OR REPLACEMENT OF TRACER WIRE.
8. FOR PROTECTION AGAINST DAMAGE , THE TRACER WIRE(S), SHALL EXTEND TO DAYLIGHT THROUGH A 1" PVC SCHEDULE 40 CONDUIT WITH ACCESS THROUGH A REMOVABLE THREADED GALVANIZED METAL CAP.
9. IF THE SEWER MAIN DOES HAVE A TRACER WIRE INSTALLED, SPLICE LATERAL WIRE TO THE MAIN WIRE USING A WATERPROOF SPLICE KIT OR WATERPROOF WIRE NUT. IF THE SEWER MAIN DOES NOT HAVE A TRACER WIRE, TERMINATE LATERAL WIRE AT THE SEWER MAIN AND INSTALL A WATERPROOF END CAP/ WIRE NUT.

NO SCALE

TRACER WIRE DETAIL FOR RELAY OF BUILDING LATERALS	City of Manitowoc ENGINEERING DEPARTMENT	
	Rev. 12/07	FORM NO. 425

CONCRETE CURB & GUTTER AND PAVEMENT TIES

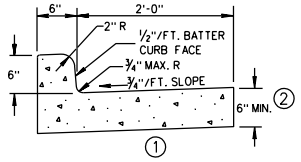

1 TYPES A & D

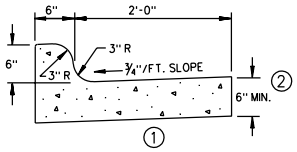

1 TYPES K & L

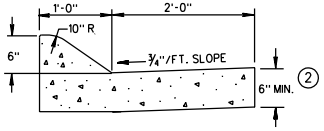

(6" MOUNTABLE CURB)

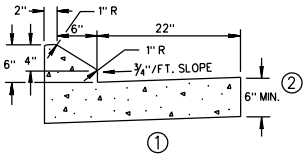

1 TYPES G & J

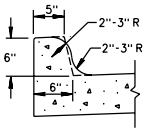

OPTIONAL CURB SHAPE
1
FOR TYPES K & L

CONCRETE CURB & GUTTER 30"

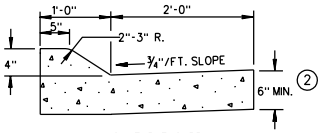

(4" MOUNTABLE CURB)

1 TYPES A & D

CONCRETE CURB & GUTTER 36"

GENERAL NOTES

DETAILS OF CONSTRUCTION, MATERIALS AND WORKMANSHIP NOT SHOWN ON THIS DRAWING SHALL CONFORM TO THE PERTINENT REQUIREMENTS OF THE CONTRACT.

PAVEMENT TIES AND TIE BARS SHALL BE EPOXY COATED IN CONFORMANCE WITH SUBSECTION 505.2.6.2 OF THE STANDARD SPECIFICATIONS.

INTEGRAL CURB & GUTTER SHALL CONFORM TO THE DETAILS SHOWN FOR CONCRETE CURB & GUTTER INCLUDING THE TRANSVERSE GUTTER SLOPE. A LONGITUDINAL CONSTRUCTION JOINT IS NOT REQUIRED WITH INTEGRAL CURB AND GUTTER.

WHERE THE TRANSVERSE JOINTS IN THE PAVEMENT ARE REQUIRED TO BE SEALED, THE JOINTS IN THE INTEGRAL CURB AND GUTTER SHALL BE SEALED TO THE FACE OF CURB WITH THE SAME TYPE OF SEALANT. THE COST OF FURNISHING AND INSTALLING THIS SEALANT SHALL BE INCIDENTAL TO THE ITEM CONCRETE CURB AND GUTTER.

UNLESS OTHERWISE SHOWN ON THE TYPICAL CROSS SECTIONS, THE BASE COURSE AND UNCLASSIFIED EXCAVATION LIMITS ARE 2'-0" BEHIND THE BACK OF CURBS.

1 TIE BARS ARE REQUIRED FOR CURB AND GUTTER TYPES A, G AND K.

2 THE BOTTOM OF CURB AND GUTTER MAY BE CONSTRUCTED EITHER LEVEL OR PARALLEL TO THE SLOPE OF THE SUBGRADE OR BASE COURSE PROVIDED A 6" MINIMUM GUTTER THICKNESS IS MAINTAINED.

3 WHEN REVERSE SLOPE GUTTER IS REQUIRED, THE LOCATION(S) WILL BE SHOWN ELSEWHERE IN THE PLAN.

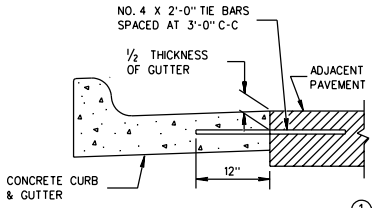

1 TYPICAL TIE BAR LOCATION

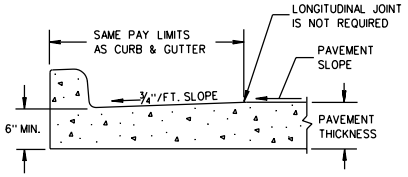

PARTIAL SECTION OF PAVEMENT WITH INTEGRAL CURB & GUTTER

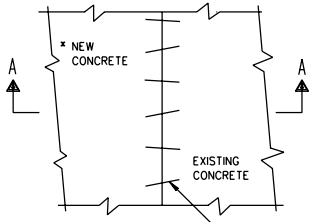

PLAN VIEW

* NEW CURB & GUTTER, SURFACE DRAINS, CONCRETE PAVEMENT OR OTHER NEW CONCRETE.

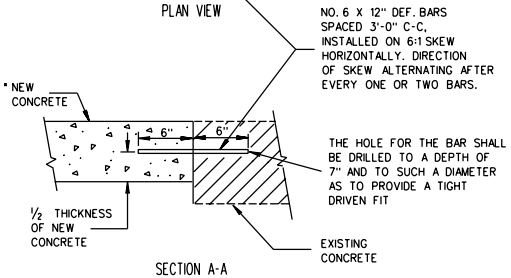

SECTION A-A

PAVEMENT TIES

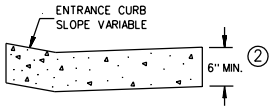

DRIVEWAY ENTRANCE CURB
(WHEN DIRECTED BY THE ENGINEER)

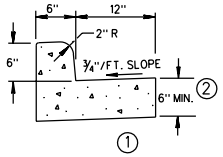

1 TYPES A & D

CONCRETE CURB & GUTTER 18"

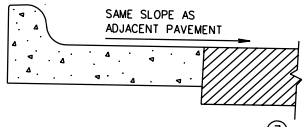

3

REVERSE SLOPE GUTTER
(TYPICAL FOR ALL CURB & GUTTER TYPES)

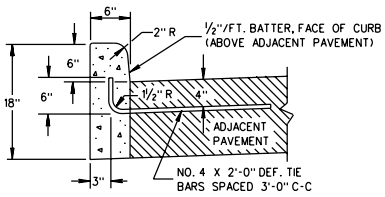

1 TYPES A & D

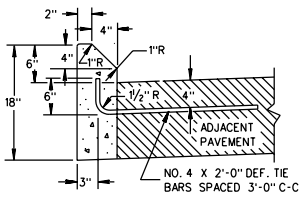

1 TYPES G & J

CONCRETE CURB

NO SCALE

City of Manitowoc
ENGINEERING DEPARTMENT

FORM NO. 501

Rev. 4/05

NOTES

1. INSTALL 1/2" FELT EXPANSION JOINTS @ 90 FOOT INTERVALS (MAX.)
2. MATERIAL MUST BE DEPTH OF CONCRETE PLUS 2-INCHES
3. DRIVEWAY FLARES SHALL NOT EXCEED 3-FEET (RESIDENTIAL)
4. DRIVEWAY FLARES SHALL NOT EXCEED 5-FEET (COMMERCIAL)

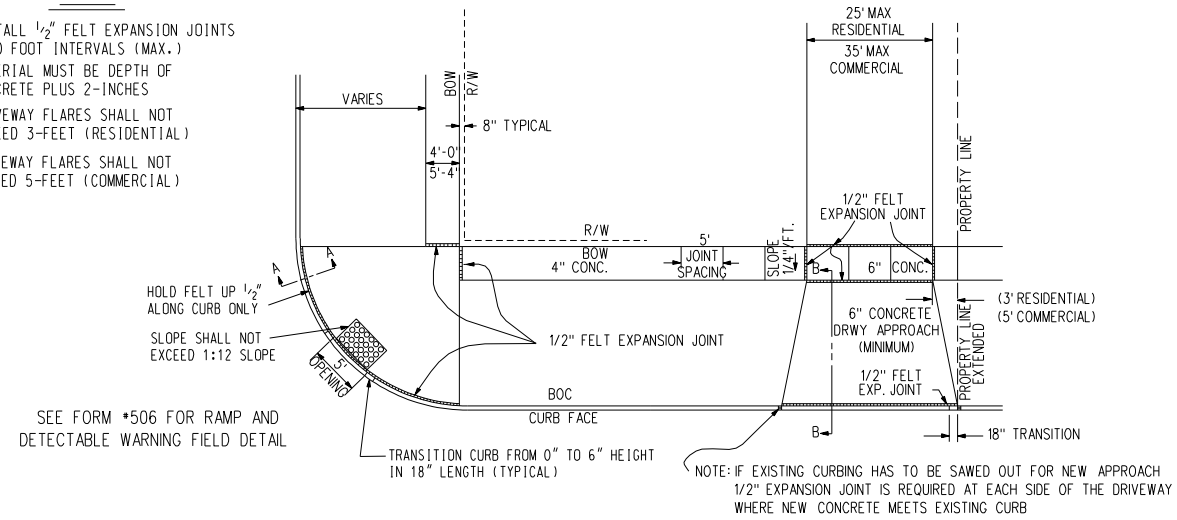

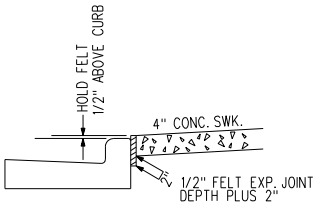

SECTION A-A

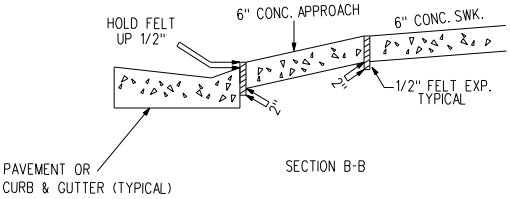

SECTION B-B

NOTE: STAKES SET BY CITY ENGINEER ARE FOR GRADE ONLY. ALIGNMENT IS DETERMINED FROM CURB FACE PER ENGINEER.

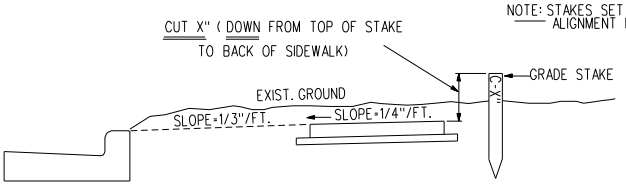

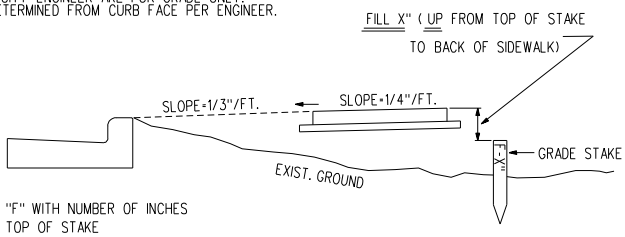

GRADE STAKES ARE MARKED: "C" WITH NUMBER OF INCHES OR "F" WITH NUMBER OF INCHES
"C" MEANS CUT OR DOWN FROM TOP OF STAKE
"F" MEANS FILL OR UP FROM TOP OF STAKE

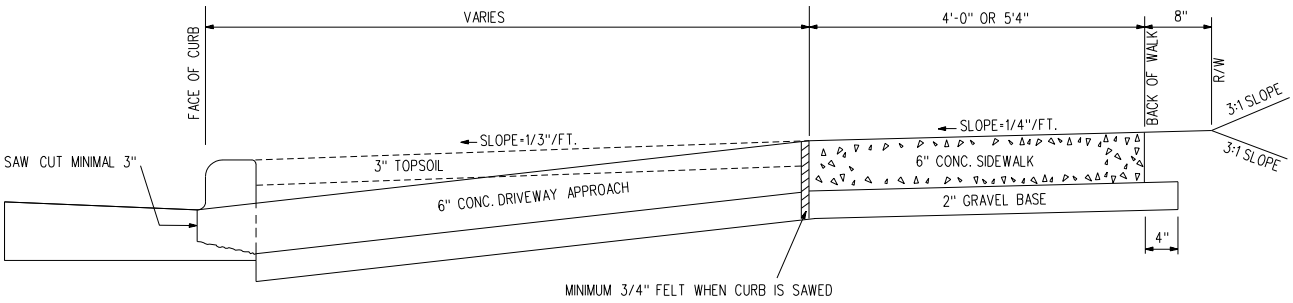

NO SCALE

SIDEWALK & DRIVEWAY CONSTRUCTION DETAIL

City of Manitowoc
ENGINEERING DEPARTMENT

Rev. 12/07
Rev. 4/05

FORM NO. 504

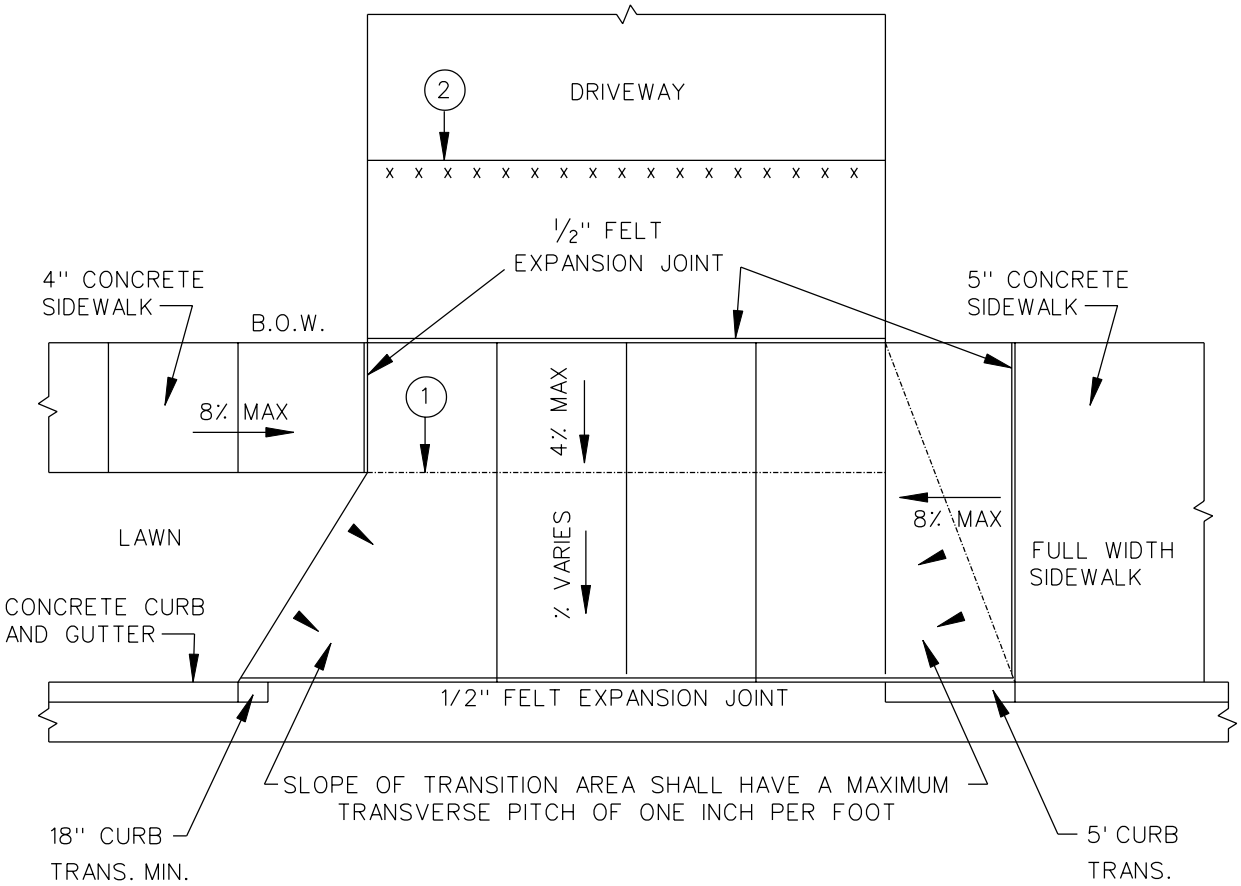

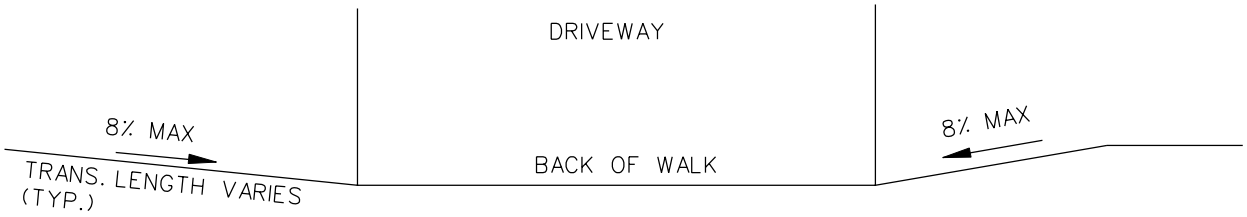

BACK OF SIDEWALK PROFILE
THROUGH A DRIVEWAY

NOTES:

SEE SECTION 500 OF STANDARD SPECS FOR JOINTING OF CONCRETE.

SEE FORM #504 FOR STANDARD DRIVEWAY NOTES.

(1) WHEN LAWN AREA EXISTS, A JOINT SHALL BE CONSTRUCTED AT FACE OF WALK (SAW OR TOOL).

(2) MAY REQUIRE DRIVEWAY RECONSTRUCTION (PER ENGINEER).

NO SCALE

CONCRETE DRIVEWAY DEPRESSED TYPE

City of Manitowoc
ENGINEERING DEPARTMENT

Rev. 4/05

FORM NO.
505

STANDARD CURB RAMPS
TYPE 1, 2 AND 3

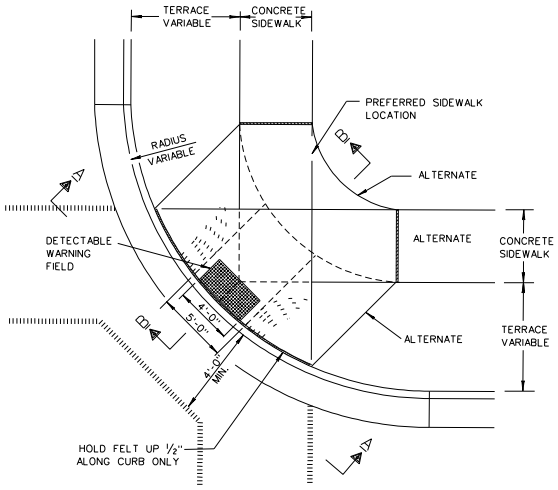

PLAN VIEW
TYPE 1 RAMP
(CENTER OF CORNER RADIUS)

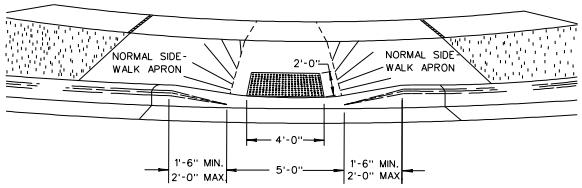

VIEW A-A

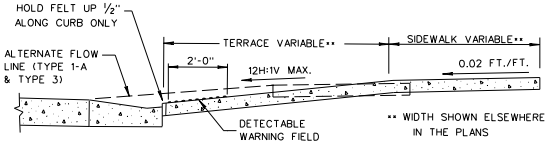

SECTION B-B

	MIN.	MAX.
A	1.6"	2.4"
B	0.65"	1.5"
C	*	*
D	0.9"	1.4"

* THE C DIMENSION IS 50% TO 65% OF THE D DIMENSION.

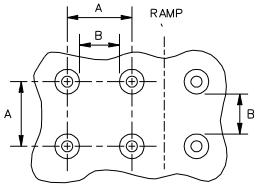

PLAN VIEW

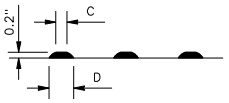

ELEVATION VIEW

TRUNCATED DOMES
DETECTABLE WARNING PATTERN DETAIL

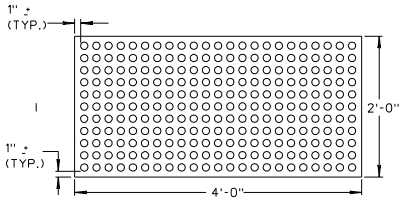

PLAN VIEW
DETECTABLE WARNING FIELD (TYPICAL)

LEGEND

- ½" EXPANSION JOINT-SIDEWALK
- CONTRACTION JOINT FIELD LOCATED
- PAVEMENT MARKING CROSSWALK (WHITE)
- ALTERNATIVE LAYOUT

LOCATION OF JOINTS MAY BE VARIED FROM THOSE SHOWN TO BETTER FIT SITE CONDITIONS AND/OR LOCAL GOVERNMENT PREFERENCE.

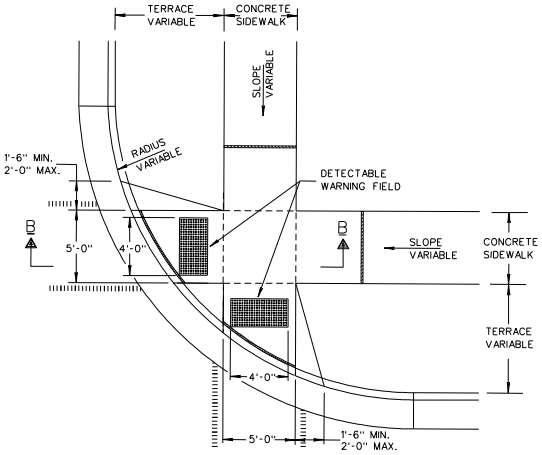

PLAN VIEW
TYPE 2 RAMP
(ON LINE WITH SIDEWALK)

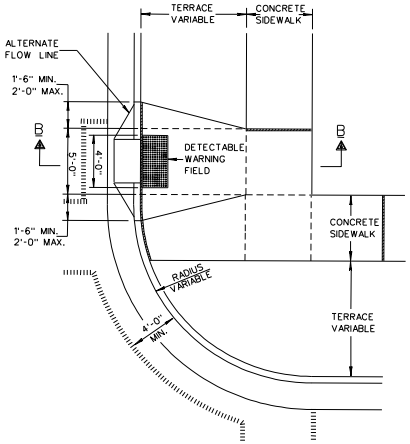

PLAN VIEW
TYPE 3 RAMP
(OUTSIDE OF CROSSWALK AREA)

GENERAL NOTES

DETAILS OF CONSTRUCTION, MATERIALS AND WORKMANSHIP NOT SHOWN ON THIS DRAWING SHALL CONFORM TO THE PERTINENT REQUIREMENTS OF THE STANDARD SPECIFICATIONS AND THE APPLICABLE SPECIAL PROVISIONS.

RAMPS SHALL BE BUILT AT 12:1 OR FLATTER. WHEN NECESSARY, THE SIDEWALK ELEVATION MAY BE LOWERED TO MEET THE HIGH POINT ON THE RAMP.

TYPES 1, 2 AND 3 RAMPS SHALL HAVE A NORMAL SIDEWALK APRON AND CURB ON BOTH SIDES OF RAMP.

DETECTABLE WARNING FIELD SHALL BE MEASURED AND PAID BY THE SQUARE FOOT AS "CURB RAMP DETECTABLE WARNING FIELD. THE CONCRETE PEDESTRIAN CURB, IF NEEDED, SHALL BE MEASURED AND PAID BY THE LINEAL FOOT AS "CONCRETE CURB PEDESTRIAN". CONCRETE SIDEWALK IN THE THE CURB RAMP AREA SHALL SHALL BE MEASURED AND PAID BY THE SQUARE FOOT AS CONCRETE SIDEWALK, INCLUDING THE AREA UNDER THE DETECTABLE WARNING FIELD.

SURFACE TEXTURE OF THE RAMP SHALL BE OBTAINED BY BROOMING TRANSVERSE TO THE SLOPE OF THE RAMP.

USE THE TYPE 3 RAMP ONLY WHEN A TYPE 1 OR TYPE 2 CANNOT BE ACHEIVED BECAUSE OF FIELD CONDITIONS.

NO SCALE

City of Manitowoc
ENGINEERING DEPARTMENT

Rev. 12/07
Rev. 4/05

FORM NO.
506

STANDARD CURB RAMP
TYPE 1-A

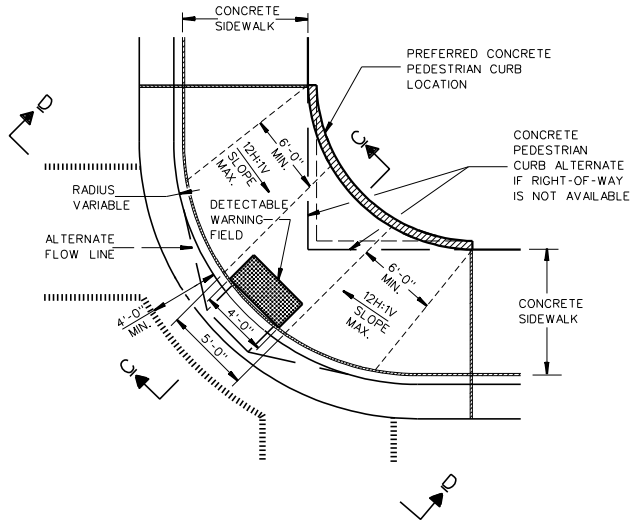

PLAN VIEW
TYPE 1-A RAMP
(NO TERRACE)

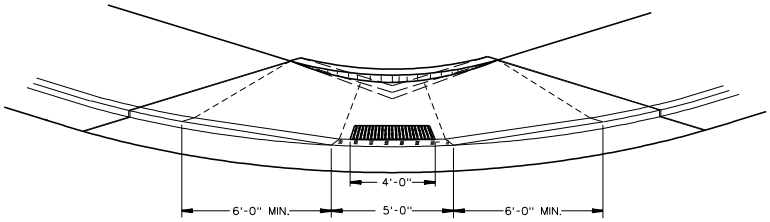

VIEW D-D

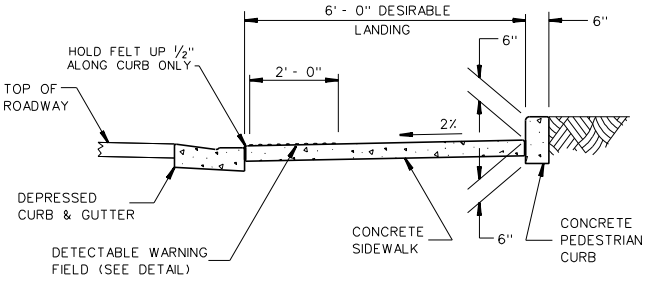

SECTION C-C

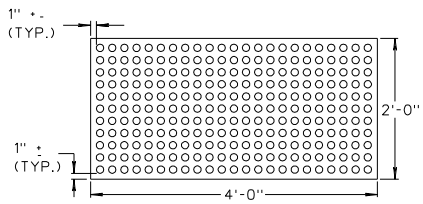

PLAN VIEW
DETECTABLE WARNING FIELD (TYPICAL)

	MIN.	MAX.
A	1.6"	2.4"
B	0.65"	1.5"
C	*	*
D	0.9"	1.4"

* THE C DIMENSION IS 50% TO 65% OF THE D DIMENSION.

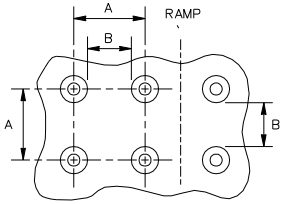

PLAN VIEW

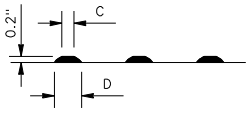

ELEVATION VIEW

TRUNCATED DOMES
DETECTABLE WARNING PATTERN DETAIL

LEGEND

- ½" EXPANSION JOINT-SIDEWALK
- CONTRACTION JOINT FIELD LOCATED
- PAVEMENT MARKING CROSSWALK (WHITE)
- ALTERNATIVE LAYOUT

GENERAL NOTES

DETAILS OF CONSTRUCTION, MATERIALS AND WORKMANSHIP NOT SHOWN ON THIS DRAWING SHALL CONFORM TO THE PERTINENT REQUIREMENTS OF THE STANDARD SPECIFICATIONS AND THE APPLICABLE SPECIAL PROVISIONS.

RAMPS SHALL BE BUILT AT 12:1 OR FLATTER. WHEN NECESSARY, THE SIDEWALK ELEVATION MAY BE LOWERED TO MEET THE HIGH POINT ON THE RAMP.

DETECTABLE WARNING FIELD SHALL BE MEASURED AND PAID BY THE SQUARE FOOT AS "CURB RAMP DETECTABLE WARNING FIELD. THE CONCRETE PEDESTRIAN CURB, IF NEEDED, SHALL BE MEASURED AND PAID BY THE LINEAL FOOT AS "CONCRETE CURB PEDESTRIAN". CONCRETE SIDEWALK IN THE THE CURB RAMP AREA SHALL SHALL BE MEASURED AND PAID BY THE SQUARE FOOT AS CONCRETE SIDEWALK, INCLUDING THE AREA UNDER THE DETECTABLE WARNING FIELD.

SURFACE TEXTURE OF THE RAMP SHALL BE OBTAINED BY BROOMING TRANSVERSE TO THE SLOPE OF THE RAMP.

NO SCALE

City of Manitowoc
ENGINEERING DEPARTMENT

Rev. 4/05
Rev. 12/07

FORM NO.
506A

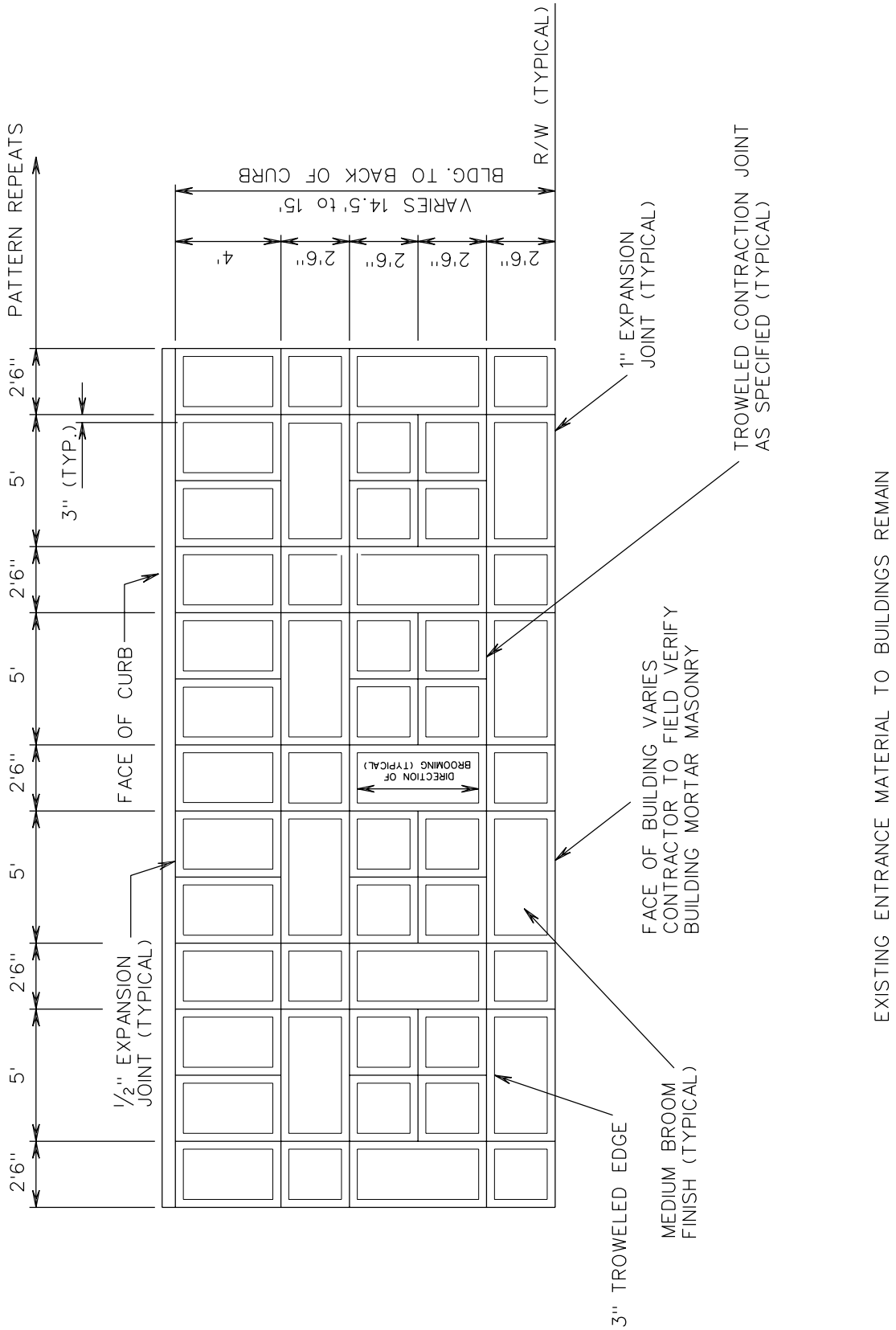

NO SCALE

CONCRETE SIDEWALK SPECIAL FINISH DETAIL

(WINDOW PANE)

City of Manitowoc

ENGINEERING DEPARTMENT

Rev. 4/05

FORM NO. 507

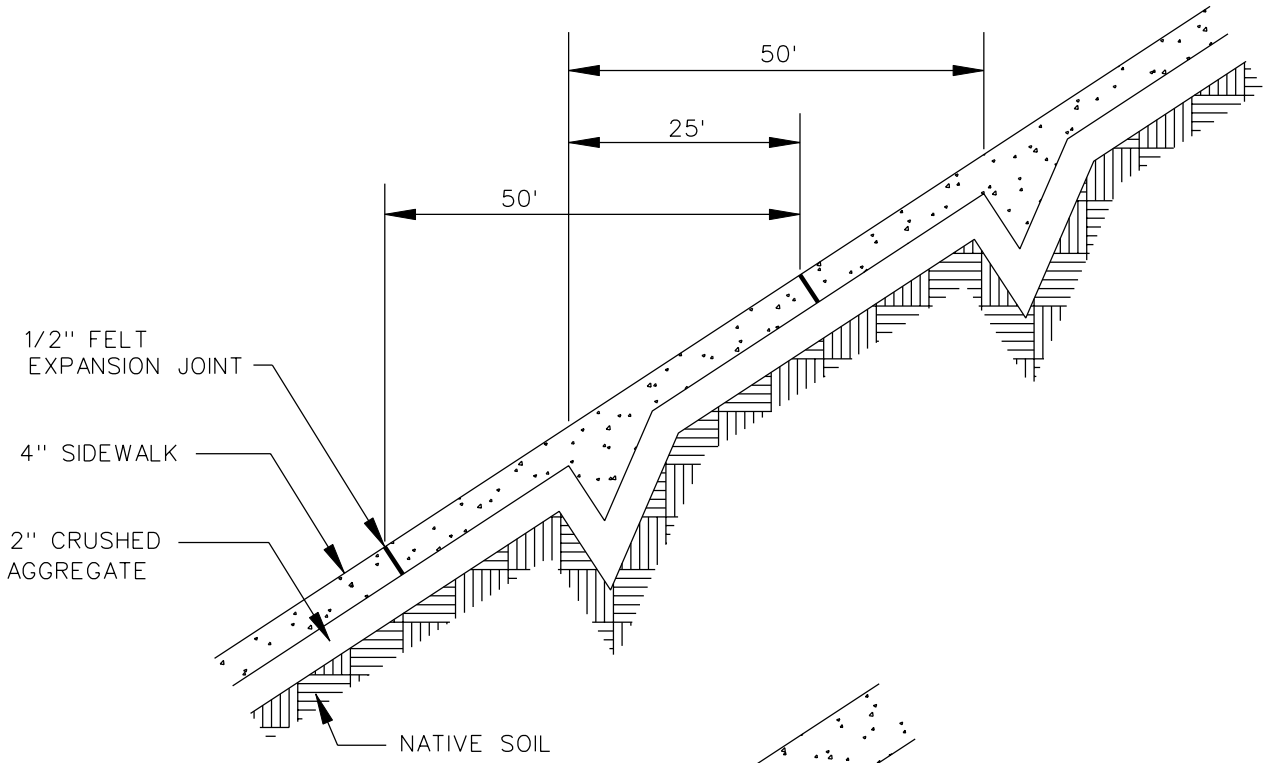

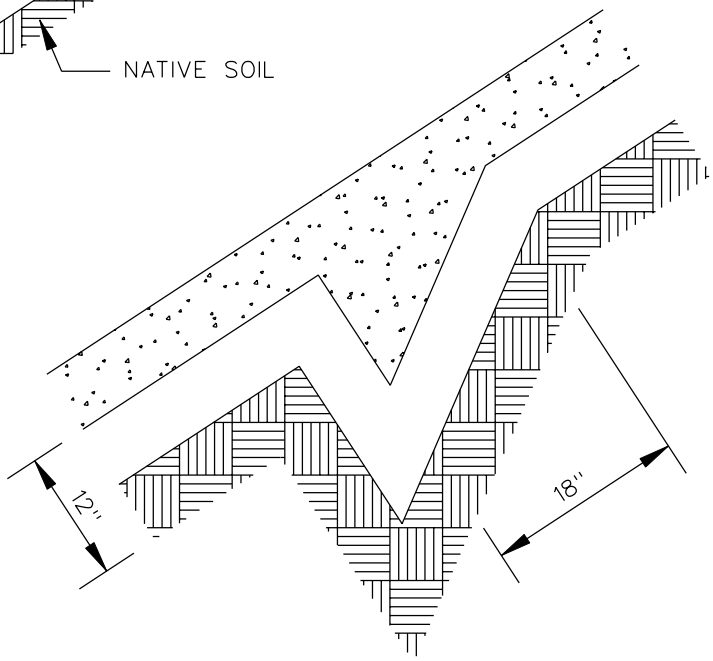

SIDEWALK ANCHORS ARE FOR USE ON SLOPES EXCEEDING 10%

NO SCALE

SIDEWALK CONST. ANCHORS

City of Manitowoc
ENGINEERING DEPARTMENT

Rev. 4/05

FORM NO.
508

NEW SIDEWALK FINAL MEASURMENT FOR CORNER LOTS

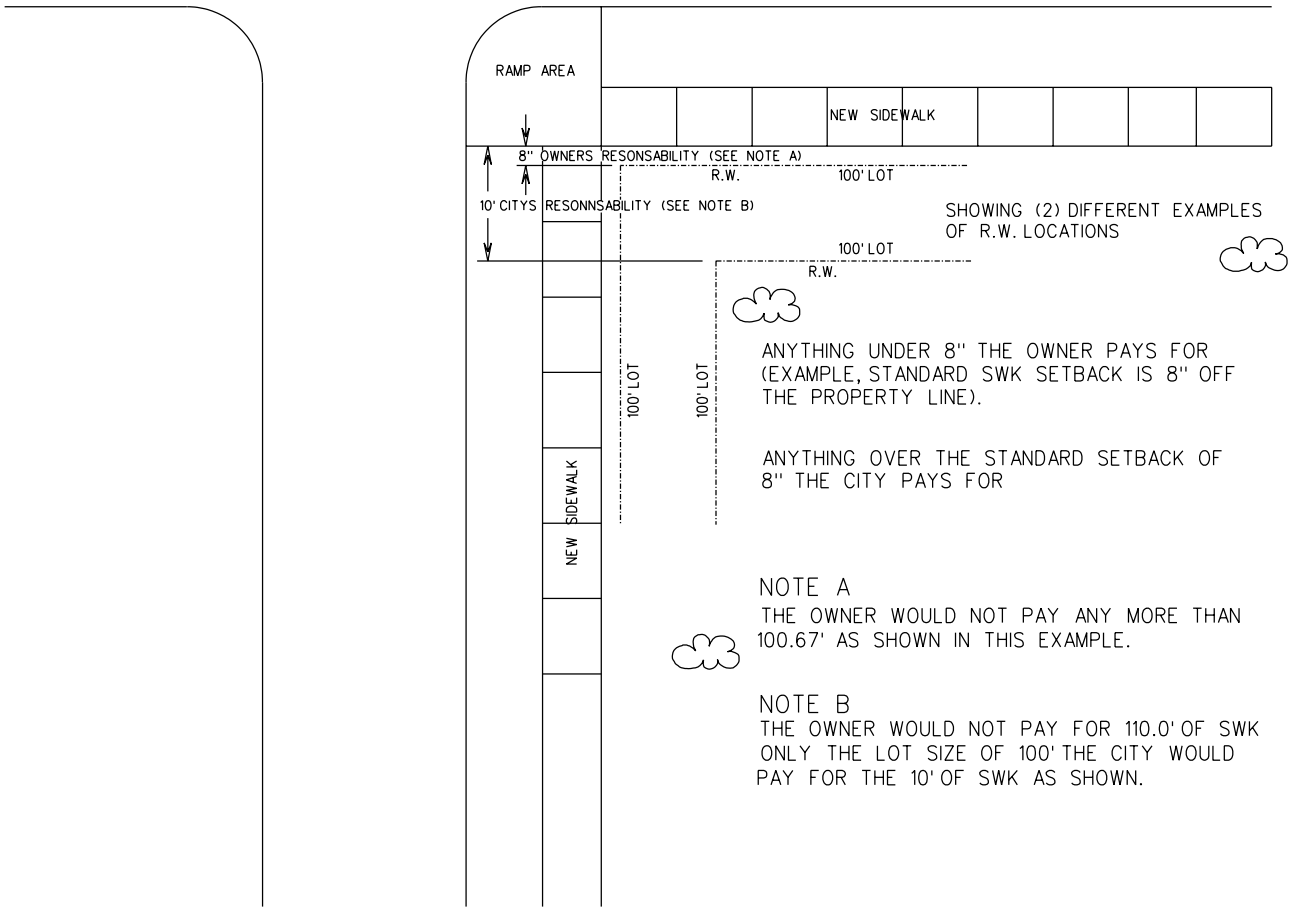

ANYTHING UNDER 8" THE OWNER PAYS FOR (EXAMPLE, STANDARD SWK SETBACK IS 8" OFF THE PROPERTY LINE).

ANYTHING OVER THE STANDARD SETBACK OF 8" THE CITY PAYS FOR

NOTE A
THE OWNER WOULD NOT PAY ANY MORE THAN 100.67' AS SHOWN IN THIS EXAMPLE.

NOTE B
THE OWNER WOULD NOT PAY FOR 110.0' OF SWK ONLY THE LOT SIZE OF 100' THE CITY WOULD PAY FOR THE 10' OF SWK AS SHOWN.

NO SCALE

GUIDE FOR SIDEWALK ASSESSMENTS ON CORNER LOTS

City of Manitowoc
ENGINEERING DEPARTMENT

Rev. 4/05

FORM NO.
509

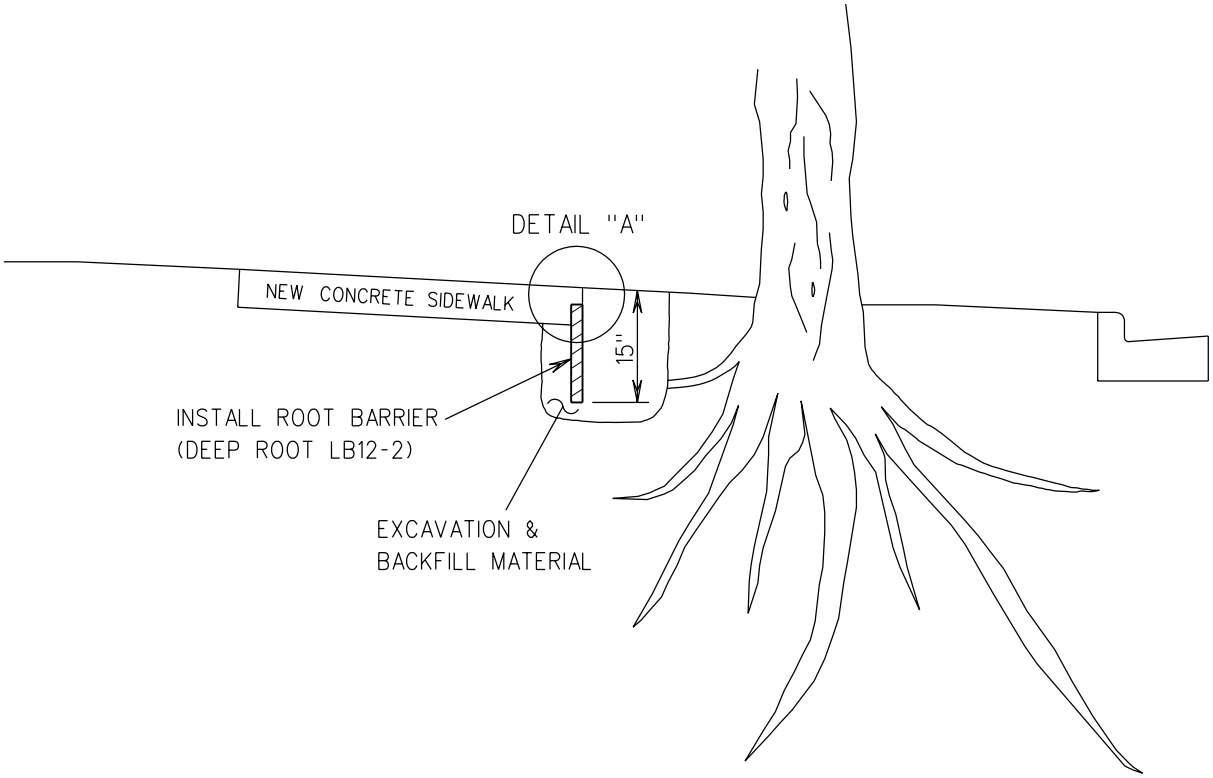

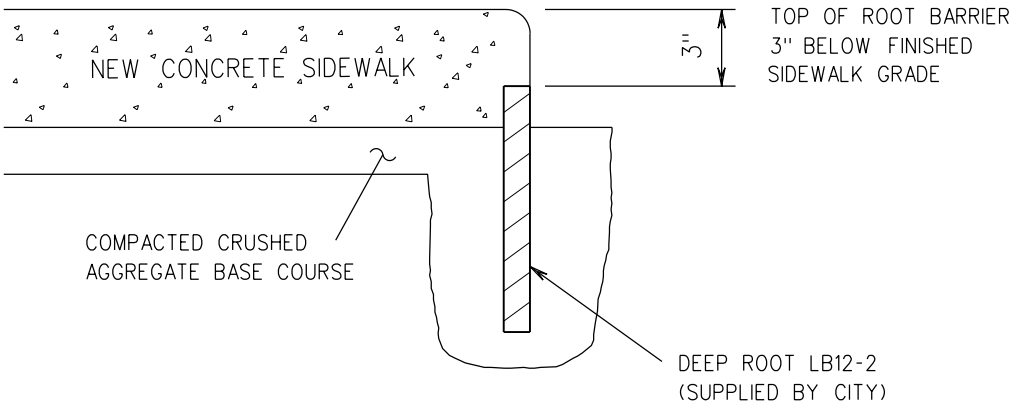

DETAIL "A"

NO SCALE

ROOT BARRIER INSTALLATION

City of Manitowoc
ENGINEERING DEPARTMENT

Rev. 4/05

FORM NO.
510

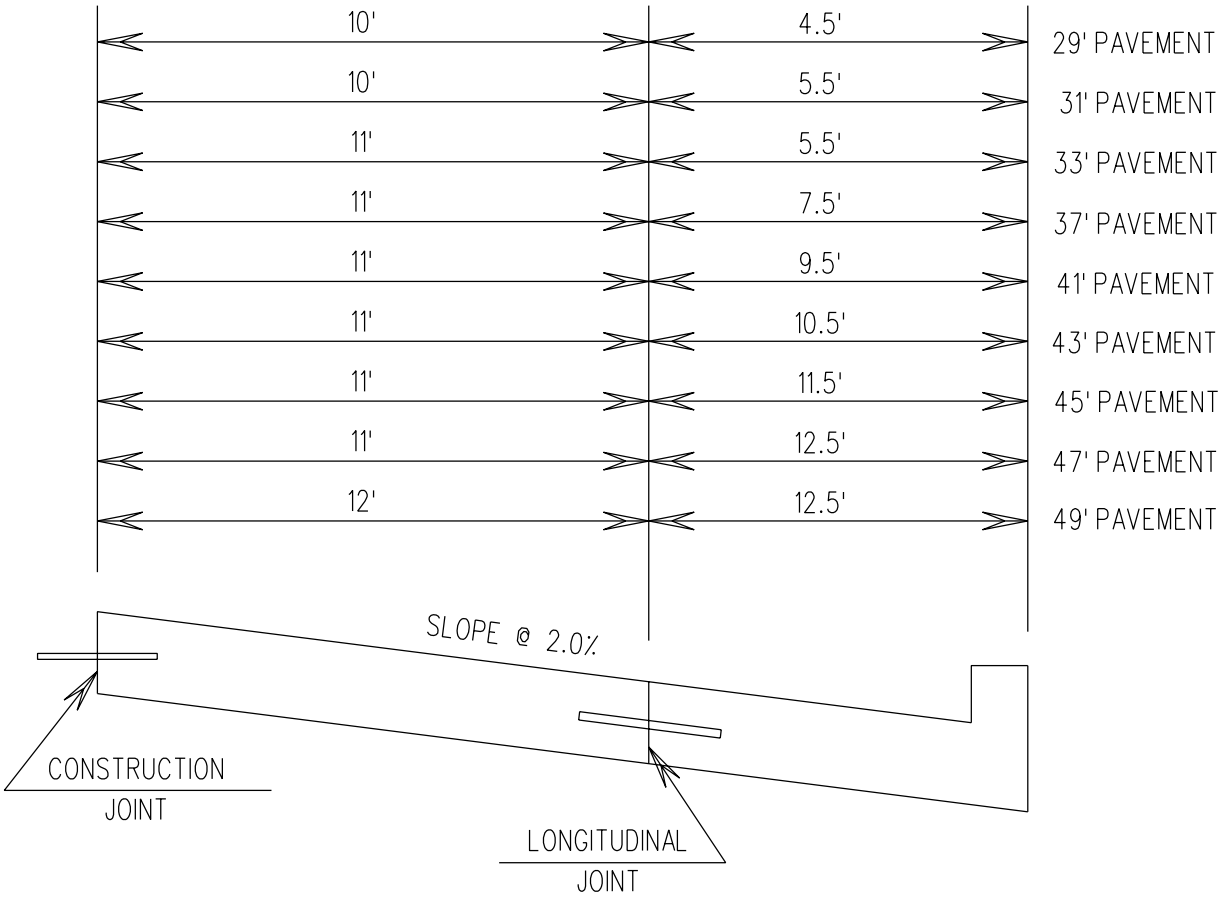

NO SCALE

CONCRETE PAVEMENT JOINT DETAIL (INTEGRAL CURB)

City of Manitowoc
ENGINEERING DEPARTMENT

Rev. 4/05

FORM NO. 511

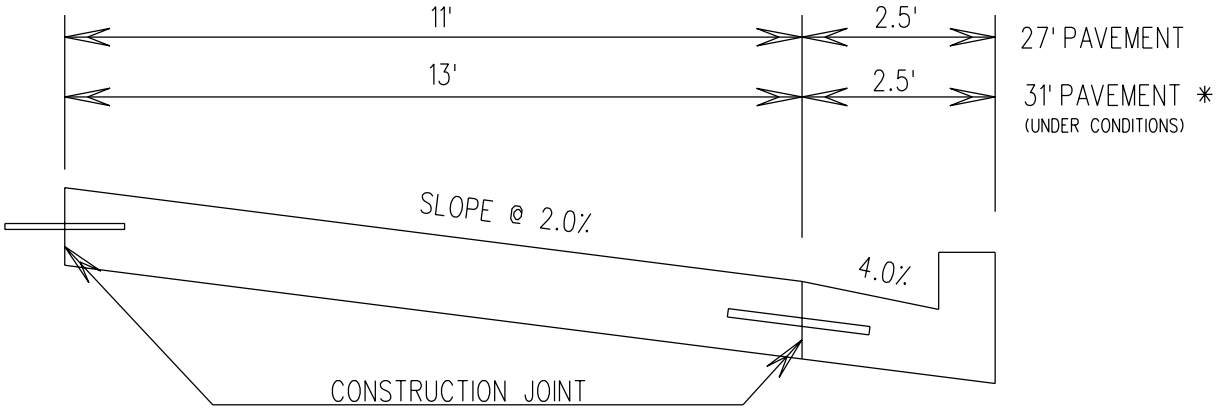

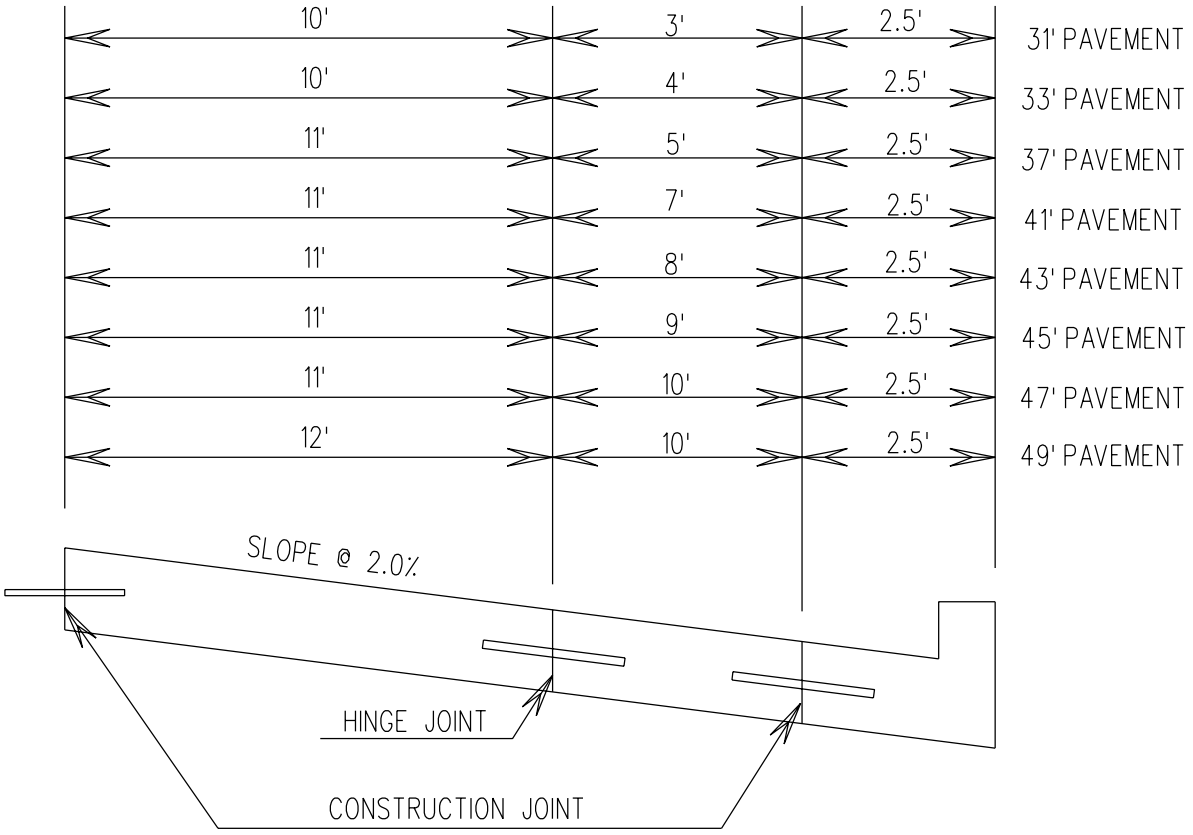

NO SCALE

CONCRETE PAVEMENT JOINT DETAIL CURB & GUTTER SECTION

City of Manitowoc
ENGINEERING DEPARTMENT

Rev. 4/05

FORM NO. 512

URBAN DOWLED CONCRETE PAVEMENT

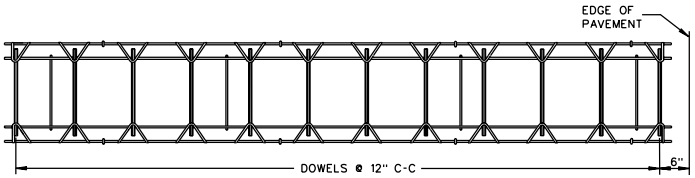

PLAN VIEW

SIDE VIEW

CONTRACTION JOINT DOWEL ASSEMBLY ①

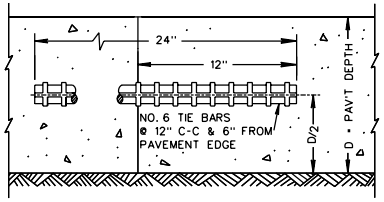

CONSTRUCTION JOINT

PAVEMENT DEPTH, DOWEL BAR SIZE AND JOINT SPACING TABLE

PAVEMENT DEPTH (D)	DOWEL BAR DIAMETER	CONTRACTION JOINT SPACING
6",6 ½"	1 ¼"	12'
7",7 ½"	1 ¼"	14'
8",8 ½"	1 ¼"	15'
9",9 ½"	1 ¼"	15'
10" & ABOVE	1 ½"	18'

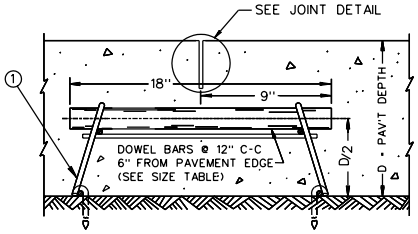

DOWELED CONTRACTION JOINT

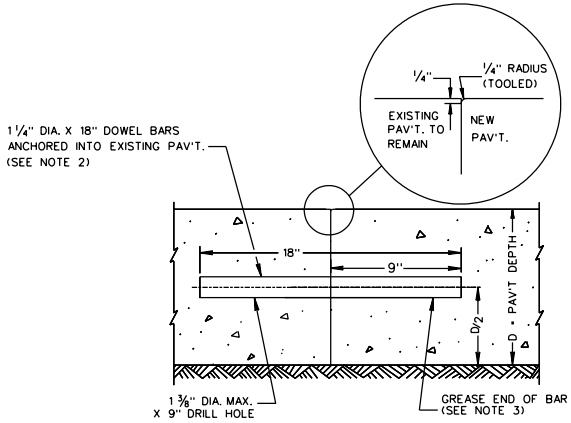

TRANSVERSE CONTRACTION JOINTS ABUTTING EXISTING PAVEMENT

④ DOWEL BAR DETAIL

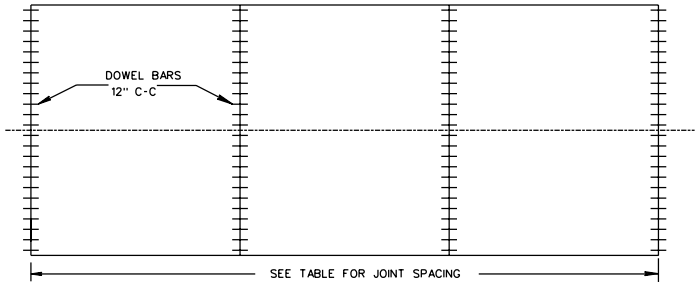

CONTRACTION JOINT LOCATIONS

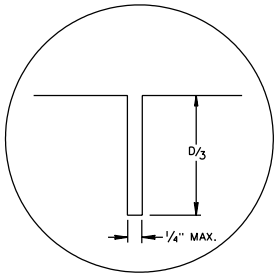

JOINT DETAIL

GENERAL NOTES

DETAILS OF CONSTRUCTION NOT SHOWN ON THIS DRAWING SHALL CONFORM TO THE STANDARD SPECIFICATIONS AND SPECIAL PROVISIONS.

CONTRACTION JOINTS

CONTRACTION JOINTS SHALL BE NORMAL TO THE CENTERLINE. THE LOCATION OF CONTRACTION JOINTS THROUGH INTERSECTIONS SHALL BE SHOWN ON THE PLANS OR AS DIRECTED BY THE ENGINEER.

CONTRACTION JOINTS SHALL NOT BE SEALED OR FILLED.

DOWEL BARS SHALL BE INSTALLED PARALLEL TO THE PAVEMENT CENTERLINE AND SURFACE.

CONSTRUCTION JOINTS

CONSTRUCTION JOINTS SHALL BE A MINIMUM OF 4 FEET FROM THE NEAREST CONTRACTION JOINT AND ALIGNED EITHER PARALLEL TO CONTRACTION JOINTS OR AT 90° TO THE CENTERLINE.

TIE BARS MAY BE INSERTED THROUGH THE HEADER BOARD AFTER THE CONCRETE HAS BEEN PLACED.

① ALTERNATIVE DESIGNS OF THE DOWEL ASSEMBLY MAY BE USED WHEN APPROVED BY THE ENGINEER. MECHANICAL DOWEL BAR IMPLANTERS MAY BE USED INSTEAD OF DOWEL ASSEMBLIES.

② DOWEL BARS SHALL BE ANCHORED INTO DRILL HOLES WITH AN APPROVED EPOXY GROUT.

③ THE FREE END OF DOWEL BARS SHALL RECEIVE A THIN UNIFORM COATING OF BOND BREAKING GREASE.

④ DOWEL BARS INSTALLED BY DRILLING SHALL BE SPACED 1'-3" ON CENTER. THE GROUPING OF DOWEL BARS SHALL BE CENTERED INSIDE THE SLAB BASED ON ALL THE FOLLOWING SITUATIONS:

BETWEEN THE EDGES OF PAVEMENTS WITHOUT LONGITUDINAL JOINTS OR BETWEEN THE EDGE OF PAVEMENT AND NEAREST LONGITUDINAL JOINT OR BETWEEN TWO ADJACENT LONGITUDINAL JOINTS.

THE CLEAR DISTANCE FROM THE EDGE OF PAVEMENT OR LONGITUDINAL JOINT TO THE NEAR EDGE OF DOWEL BAR NEAREST THAT EDGE OR JOINT SHALL BE A MINIMUM OF 6 INCHES AND A MAXIMUM OF 14 INCHES.

NO SCALE

City of Manitowoc
ENGINEERING DEPARTMENT

Rev. 4/05

FORM NO. 513

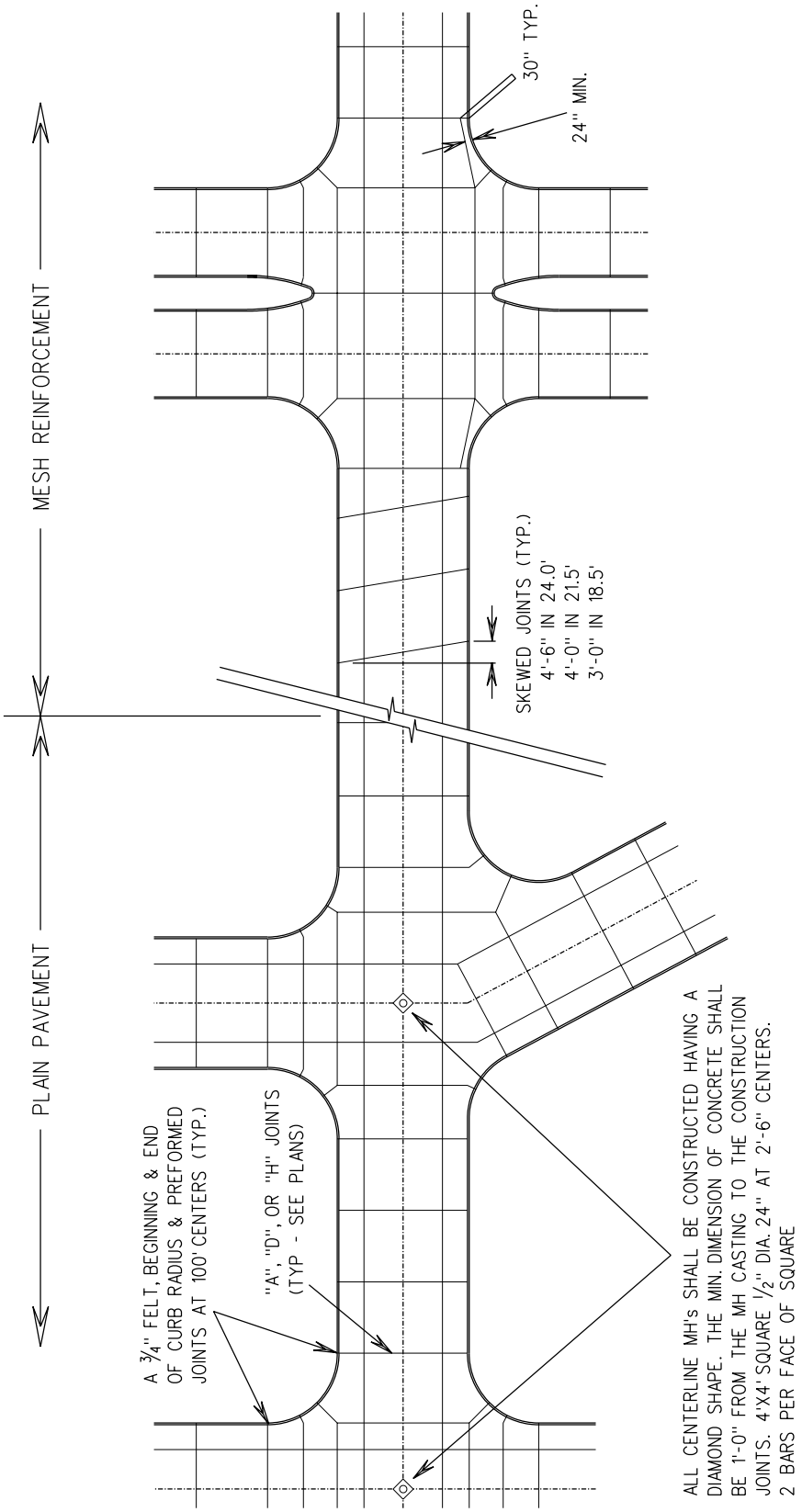

NOTE: ALL JOINTS SHALL HAVE CONCRETE JOINT SEALER, HOT POURED ELASTIC TYPE ASTM DESIGNATION D-3405

NO SCALE

CONCRETE PAVEMENT TYPICAL JOINT LAYOUT DETAIL

City of Manitowoc
ENGINEERING DEPARTMENT

Rev. 4/05

FORM NO. 514

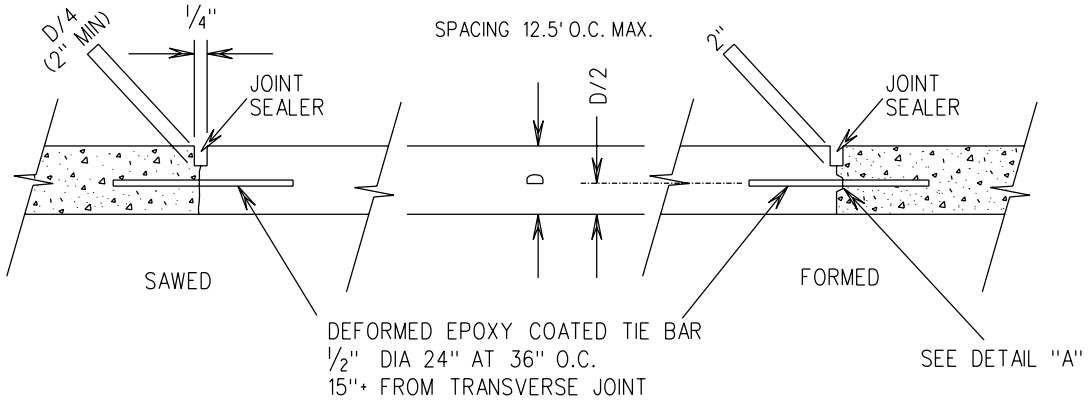

LONGITUDINAL JOINT
(TYPE-B)

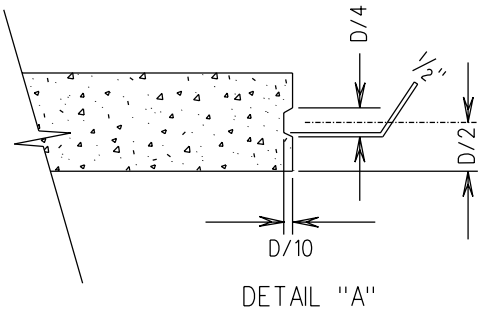

LONGITUDINAL CONSTRUCTION JOINT
AT EACH EDGE OF 24' SLAB (RURAL)

DETAIL "A"

TRANSVERSE JOINTS

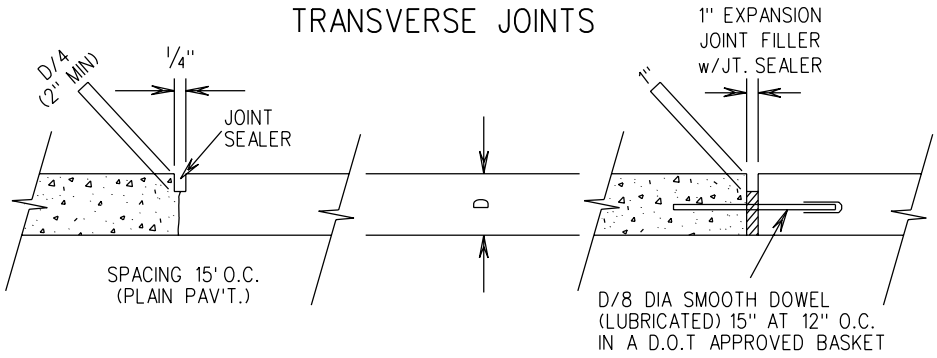

TYPE-C

TYPE-A

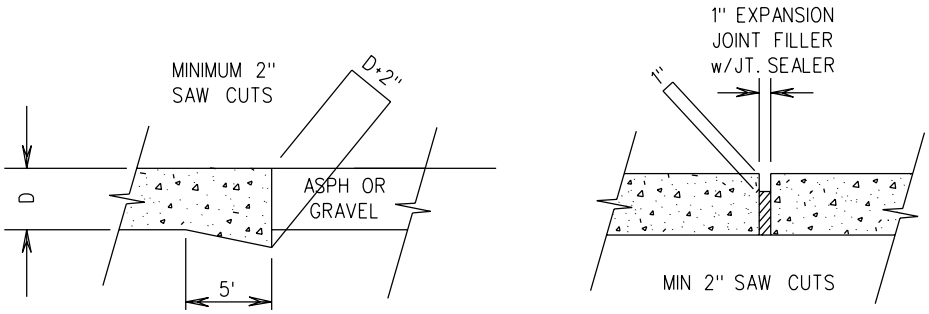

TYPE-H

TYPE-D

NO SCALE

CONCRETE PAVEMENT TYPICAL JOINT DETAIL

City of Manitowoc
ENGINEERING DEPARTMENT

Rev. 4/05

FORM NO.
515

CONCRETE PAVEMENT
APPROACH SLAB AT BRIDGE ABUTS.

* (RS) = REINFORCED CONCRETE SLAB
* (PS) = PAVED CONCRETE SHOULDER: CONCRETE PAVEMENT, OR CONCRETE SURFACE DRAIN (SEE DETAILS ELSEWHERE IN THE PLAN)
* (NRS) = NON-REINFORCED CONCRETE SLAB
** STANDARD TRANSVERSE JOINT SPACING (SEE SDD 13C11 & SDD 13C12)

Ⓐ STANDARD CONTRACTION JOINT NORMAL OR SKEWED TO ℄ OR ℄
Ⓑ 1½" EXPANSION JOINT WITH DOWEL BARS NORMAL OR SKEWED TO ℄ OR ℄
Ⓒ STANDARD LONGITUDINAL JOINT AND TIE BARS.

GENERAL NOTES

DETAILS OF CONSTRUCTION NOT SHOWN ON THIS DRAWING SHALL CONFORM TO THE STANDARD SPECIFICATIONS AND SPECIAL PROVISIONS.

DOWEL BARS ARE NOT REQUIRED WHEN THE APPROACH SLAB ABUTS AN ASPHALT PAVEMENT OVER BASE COURSE.

SPLICING OF NO. 6 BARS IN THE APPROACH SLAB IS PERMITTED FOR SKEWED STRUCTURES ONLY. SPLICES SHALL BE STAGGERED, WITH A MAXIMUM OF ONE SPLICE PER BAR. THE LENGTH OF LAP SHALL BE 20 INCHS.

① NO. 4 BARS SPACED AT 2'-0" C-C IN BOTH THE LONGITUDINAL AND TRANSVERSE DIRECTIONS MAY BE USED FOR TOP REINFORCEMENT AS AN ALTERNATIVE TO THE WELDED WIRE FABRIC.

② TIE BARS BETWEEN REINFORCED SLABS MAY BE OMITTED WHERE SLAB REINFORCEMENT EXTEND ACCROSS THE CENTERLINE OR REFERENCE LINE.

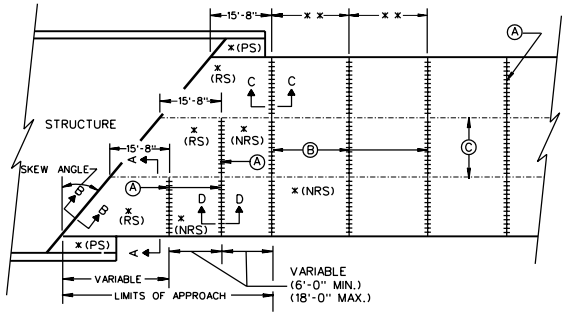

SKEWED PAVEMENT
MORE THAN 2 LANES

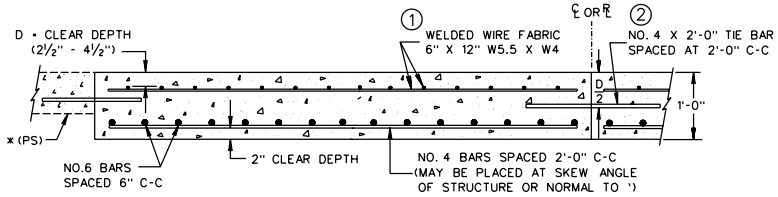

SECTION A-A
REINFORCEMENT POSITIONING DETAIL

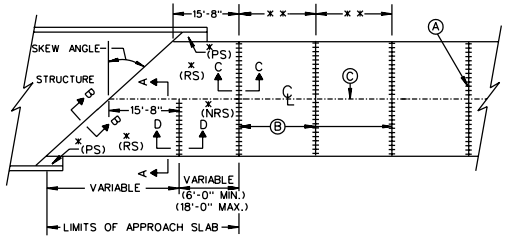

SKEWS > 30°
(PAVEMENT WIDTH ≤ 30')

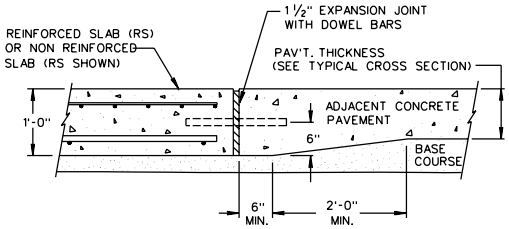

SECTION C-C
TRANSITION DETAIL
APPROACH SLAB TO ADJACENT PAVEMENT

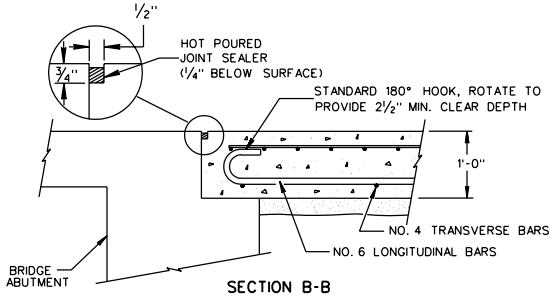

SECTION B-B
BEND DETAIL
BOTTOM REINFORCEMENT

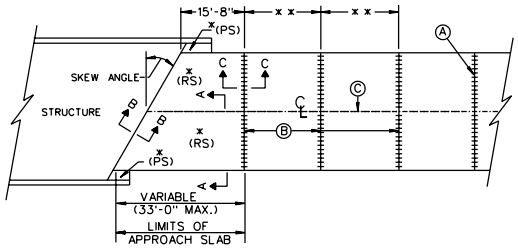

SKEWS ≤ 30°
(PAVEMENT WIDTH ≤ 30')
APPROACH SLAB AND ADJACENT PAVEMENT

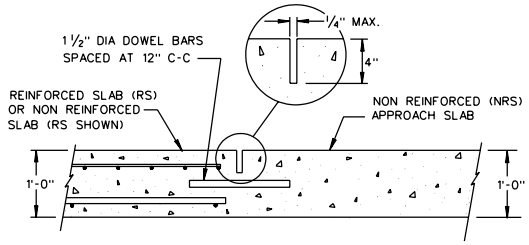

SECTION D-D
CONTRACTION JOINT

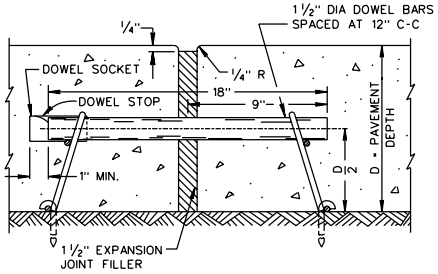

EXPANSION JOINT

NO SCALE

City of Manitowoc
ENGINEERING DEPARTMENT

Rev. 4/05

FORM NO. 516

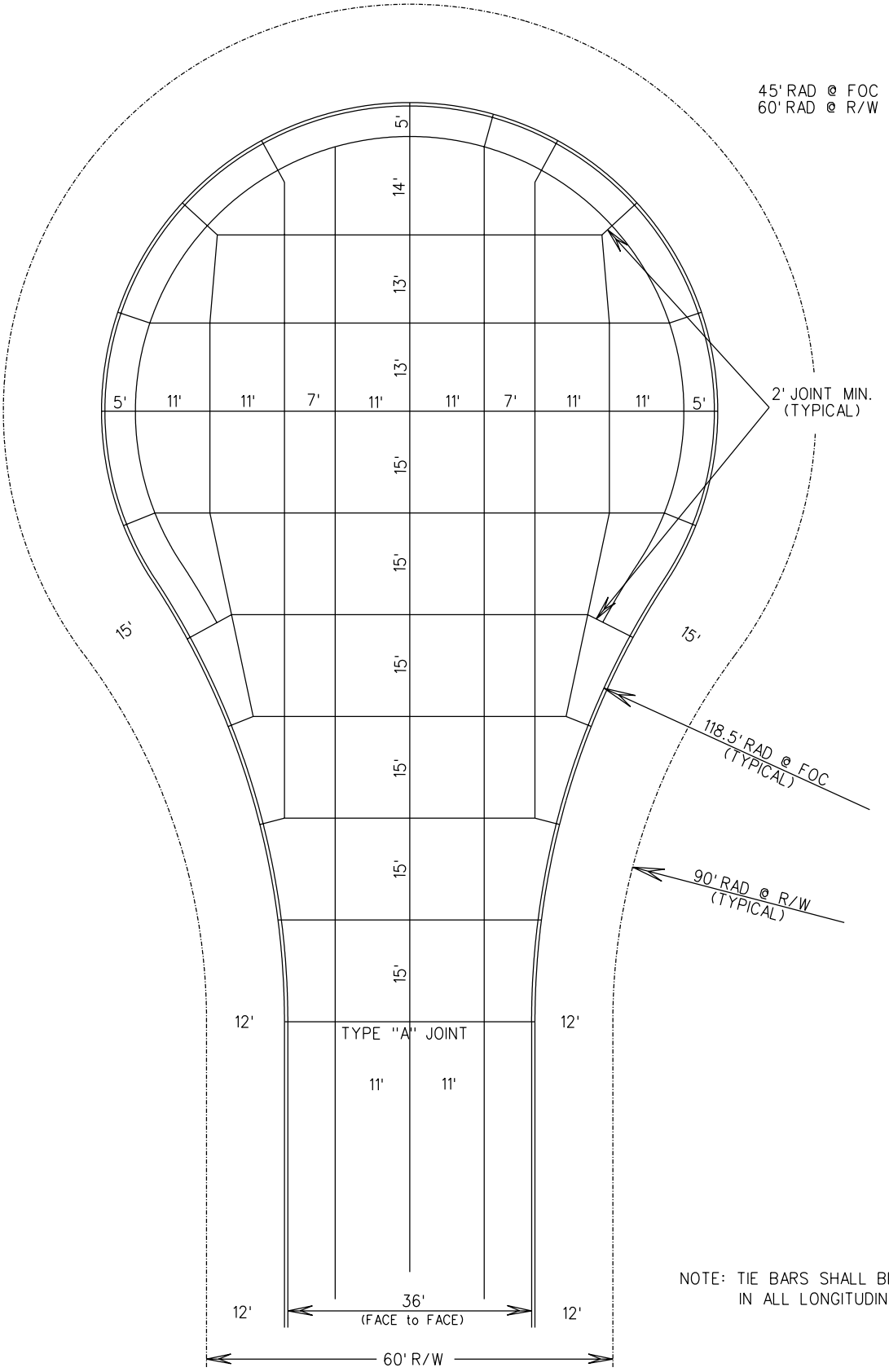

NOTE: TIE BARS SHALL BE INSTALLED IN ALL LONGITUDINAL JOINTS

NO SCALE

STANDARD CUL-DE-SAC JOINT DETAIL (36' FACE TO FACE)

City of Manitowoc
ENGINEERING DEPARTMENT

Rev. 4/05

FORM NO. 517

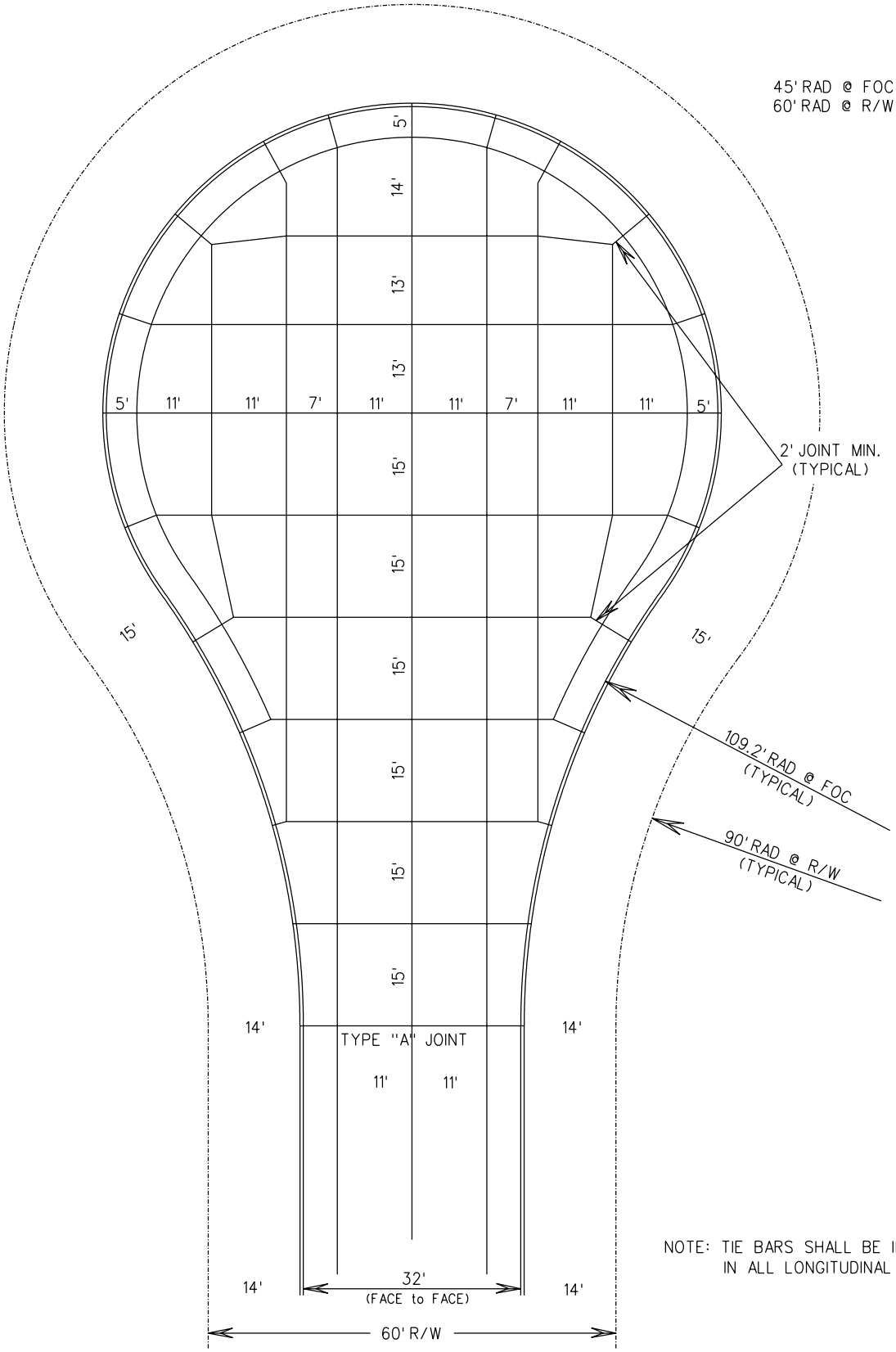

NOTE: TIE BARS SHALL BE INSTALLED IN ALL LONGITUDINAL JOINTS

NO SCALE

STANDARD CUL-DE-SAC JOINT DETAIL (32' FACE TO FACE)

City of Manitowoc
ENGINEERING DEPARTMENT

Rev. 4/05

FORM NO. 518

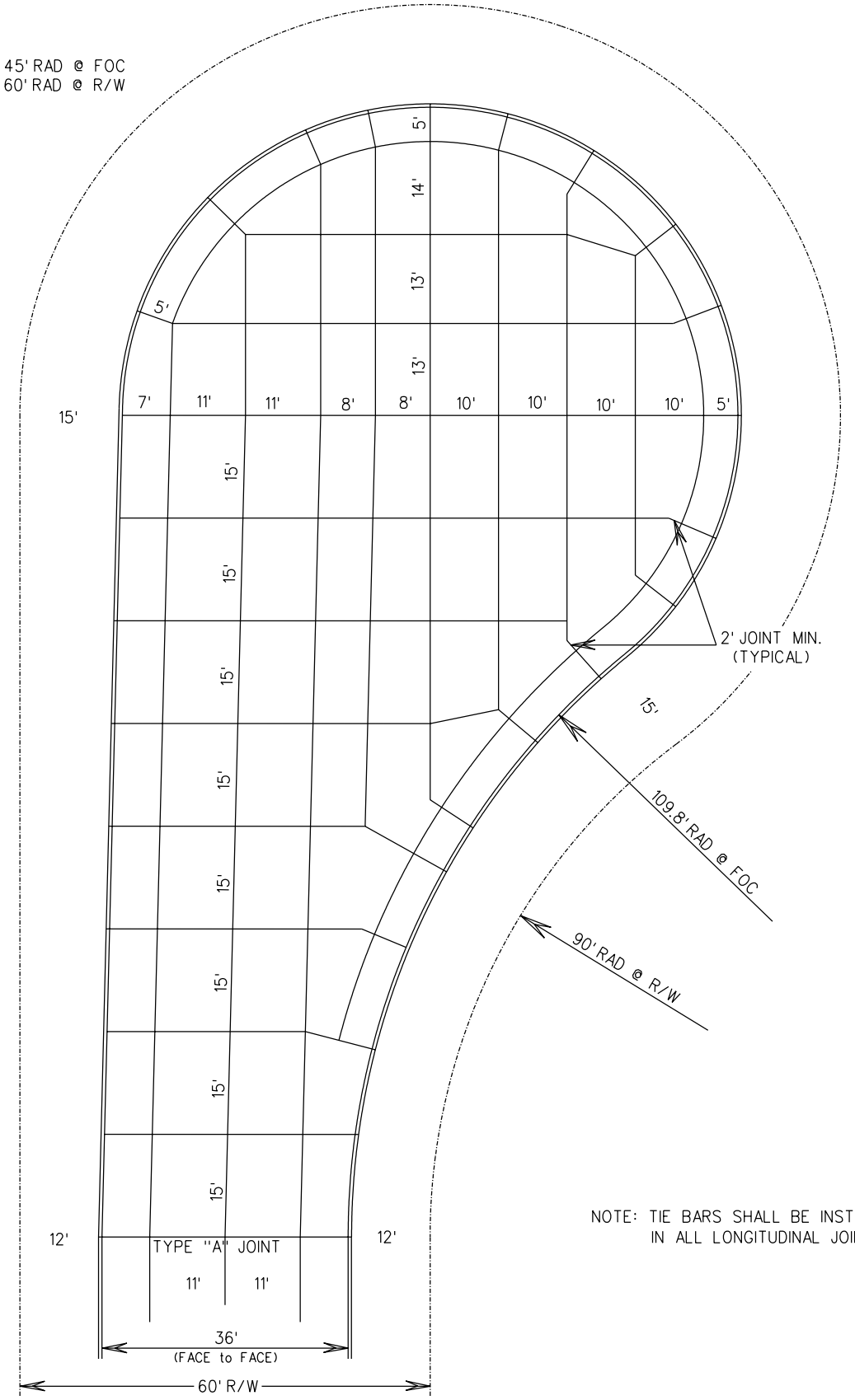

NOTE: TIE BARS SHALL BE INSTALLED IN ALL LONGITUDINAL JOINTS

NO SCALE

OFFSET CUL-DE-SAC JOINT DETAIL (36' FACE TO FACE)

City of Manitowoc
ENGINEERING DEPARTMENT

Rev. 4/05

FORM NO. 519

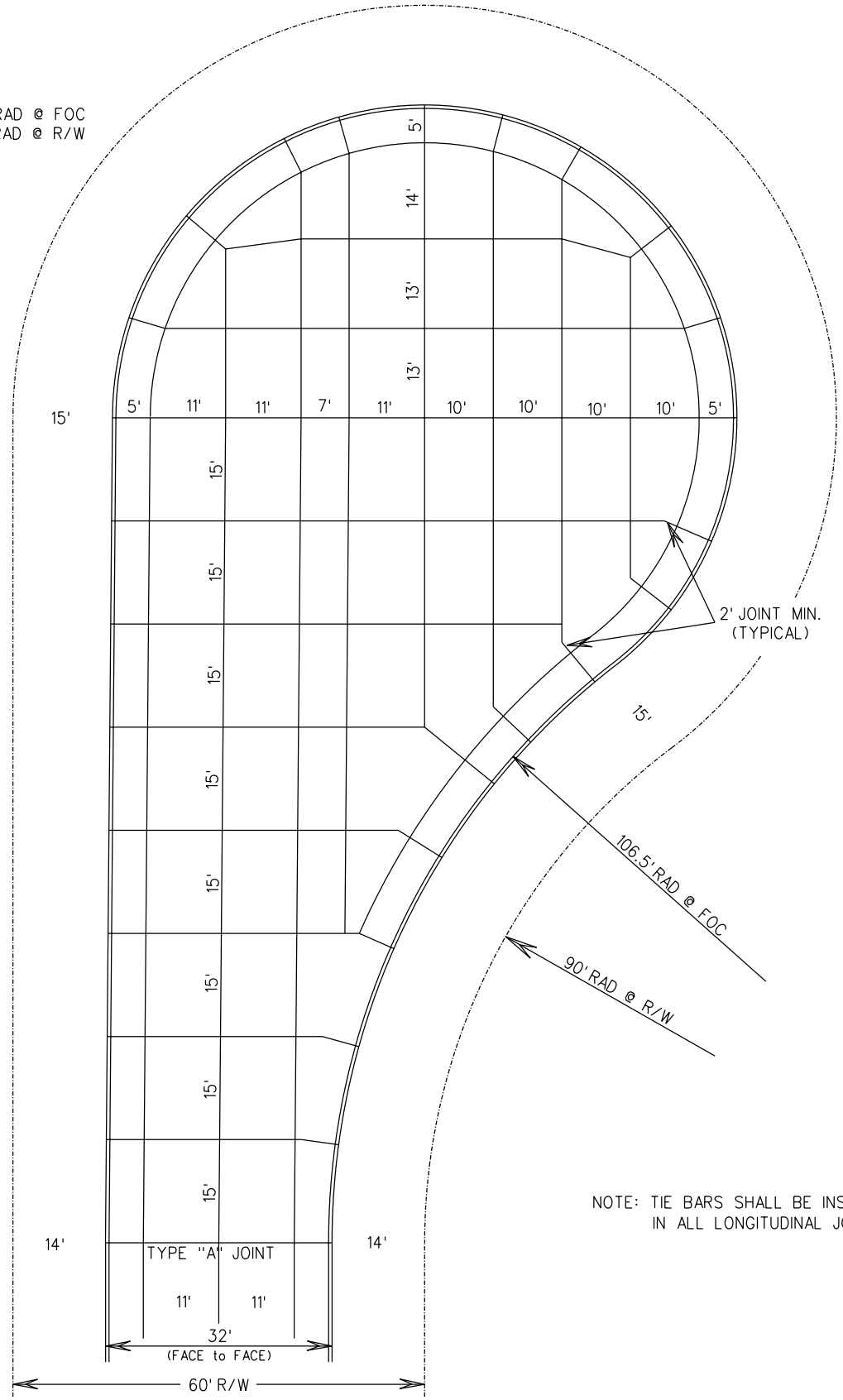

NOTE: TIE BARS SHALL BE INSTALLED IN ALL LONGITUDINAL JOINTS

NO SCALE

OFFSET CUL-DE-SAC JOINT DETAIL (32' FACE TO FACE)

City of Manitowoc
ENGINEERING DEPARTMENT

Rev. 4/05

FORM NO. 520

CONCRETE MEDIAN
SLOPED AND BLUNT NOSE

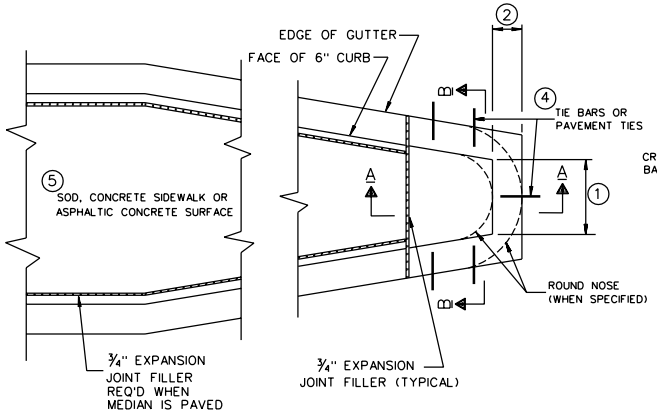

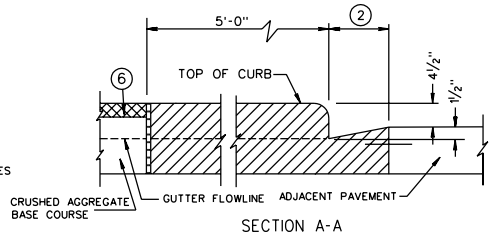

SECTION A-A

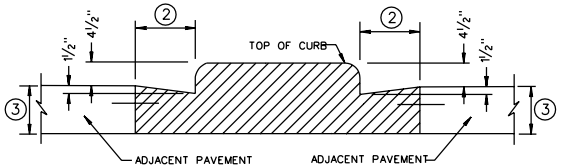

SECTION B-B

CONCRETE MEDIAN BLUNT NOSE DETAIL

GENERAL NOTES

DETAILS OF CONSTRUCTION, MATERIALS AND WORKMANSHIP NOT SHOWN ON THIS DRAWING SHALL CONFORM T THE PERTINENT REQUIREMENTS OF THE STANDARD SPECIFICATIONSAND THE APPLICABLE SPECIAL PROVISIONS.

1. SEE PLAN FOR MEDIAN NOSE WIDTH AND RADIUS (FOR ROUND NOSE ALTERNATE).
2. WIDTH OF GUTTER TO MATCH EXISTING ADJACENT GUTTER OR AS SPECIFIED ELSEWHERE IN THE PLAN.
3. DEPTH EQUAL TO ADJACENT PAVEMENT. ADJACENT PAVEMENT STRUCTURE DETAILS ARE SHOWN ON THE PLAN. TYPICAL OPTIONS:
   (1) NEW OR EXISTING CONCRETE PAVEMENT.
   (2) ASPHALTIC CONCRETE PAVEMENT OVER NEW OR EXISTING CONCRETE BASE COURSE.
   (3) ASPHALTIC CONCRETE PAVEMENT OVER CRUSHED AGGREGATE BASE COURSE.
4. TIE BARS OR PAVEMENT TIES REQUIRED IN NEW CONCRETE PAVEMENT OR CONCRETE BASE COURSE. TIE BARS SHALL BE NO. 4 X 2'-0" SPACED AT 2'-0" C-C. PAVEMENT TIES ARE REQUIRED IN EXISTING CONCRETE BASE COURSE TIES SHALL BE NO. 6 X 1'-0" SPACED AT 3'-0" C-C INSTALLED ON A HORIZONTAL SKEW OF 6:1. THE DIRECTION OF SKEW SHALL ALTERNATE AFTER EVERY ONE OR TWO BARS.
5. SURFACE TYPE AND DETAILS ARE SHOWN ELSEWHERE IN THE PLAN.

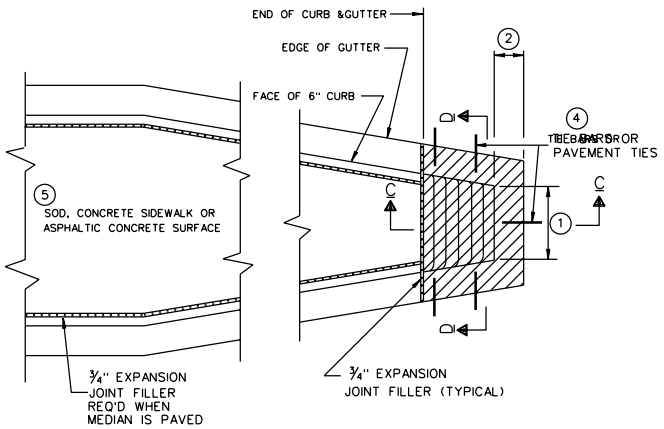

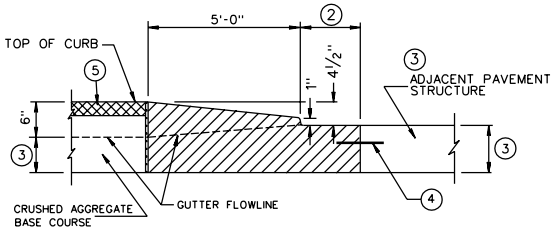

SECTION C-C

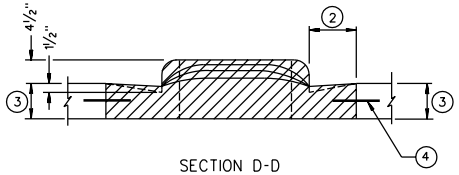

SECTION D-D

CONCRETE MEDIAN SLOPED NOSE DETAIL

NO SCALE

City of Manitowoc
ENGINEERING DEPARTMENT

Rev. 4/05

FORM NO. 524

CONCRETE CORRUGATED MEDIAN

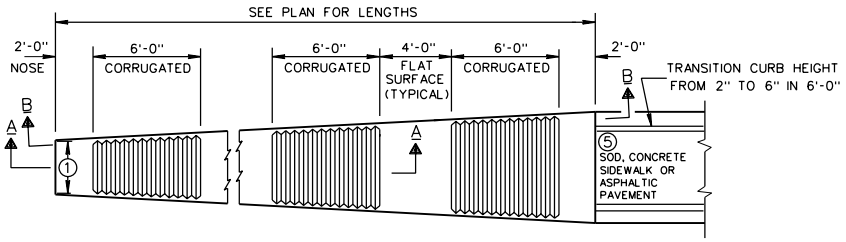

PLAN VIEW

VARIABLE WIDTH CONCRETE CORRUGATED MEDIAN

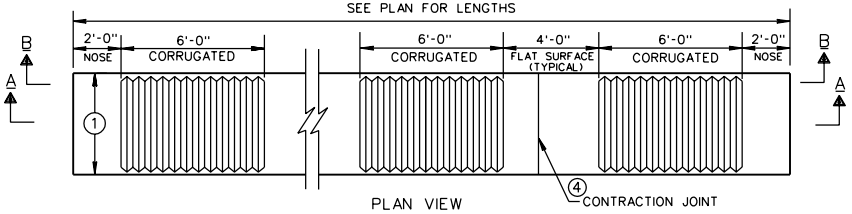

PLAN VIEW

UNIFORM WIDTH CONCRETE CORRUGATED MEDIAN

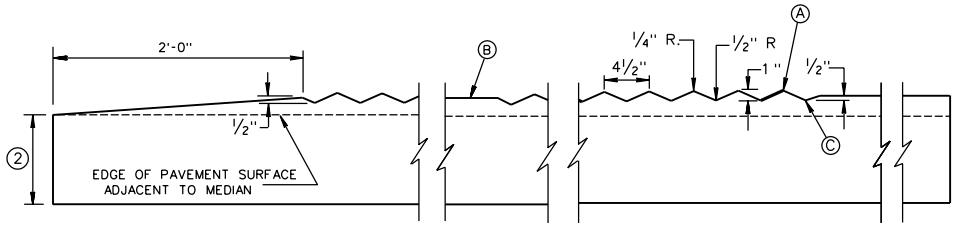

SECTION A-A

LONGITUDINAL SECTION

GENERAL NOTES

DETAILS OF CONSTRUCTION, MATERIALS AND WORKMANSHIP NOT SHOWN ON THIS DRAWING SHALL CONFORM TO THE PERTINENT REQUIREMENTS OF THE STANDARD SPECIFICATIONS AND THE APPLICABLE SPECIAL PROVISIONS.

WHEN CONCRETE CORRUGATED MEDIAN IS CONSTRUCTED TO SEPARATE TRAFFIC FLOWING IN THE SAME DIRECTION NO PAVEMENT MARKING IS APPLIED TO THE CONCRETE CORRUGATED MEDIAN AREA.

WHEN CONCRETE CORRUGATED MEDIAN IS CONSTRUCTED TO SEPARATE TRAFFIC OPERATING IN THE OPPOSING DIRECTION YELLOW PAVEMENT MARKING SHALL BE APPLIED TO THE FLAT PORTION OF THE CONCRETE CORRUGATED MEDIAN. THE ITEM OF PAVEMENT MARKING, CONCRETE CORRUGATED MEDIAN, WILL BE MEASURED IN PLACE AND ACCEPTED IN ACCORDANCE WITH THE CONTRACT AND PAID FOR AT THE CONTRACT UNIT PRICE PER SQUARE FOOT.

1. SEE PLANS FOR CONSTANT OR VARIABLE WIDTH.
2. THE DEPTH OF THE CONCRETE CORRUGATED MEDIAN SHALL BE 9-INCHES UNLESS SHOWN OTHERWISE IN THE PLAN. ADJACENT PAVEMENT STRUCTURE DETAILS ARE SHOWN IN THE PLAN. TYPICAL OPTIONS ARE:
   (1) NEW OR EXISTING CONCRETE PAVEMENT.
   (2) ASPHALTIC CONCRETE OVER NEW OR EXISTING CONCRETE BASE COURSE, OR PAVEMENT.
   (3) ASPHALTIC PAVEMENT OVER CRUSHED AGGREGATE BASE COURSE.
3. TIE BARS OR PAVEMENT TIES REQUIRED IN NEW CONCRETE PAVEMENT OR CONCRETE BASE COURSE. TIE BARS SHALL BE NO. 4 X 2'-0" SPACED AT 2'-0" C-C.

   INSTALL TIE BARS TO MAINTAIN A MINIMUM OF 3-INCHES OF COVER BETWEEN THE TIE BAR AND THE CONCRETE SURFACE (BOTTOM AND TOP).

   PAVEMENT TIES REQUIRED IN EXISTING CONCRETE PAVEMENT OR CONCRETE BASE COURSE, PAVEMENT TIES SHALL BE NO. 6 X 1'-0" SPACED AT 3'-0" C-C INSTALLED ON A HORIZONTAL SKEW OF 6:1. THE DIRECTION OF SKEW SHALL ALTERNATE AFTER EVERY ONE OR TWO BARS.
4. CONCRETE PAVEMENT TRANSVERSE CONTRACTION JOINTS SHALL BE CONSTRUCTED TO MATCH THE JOINTS IN ADJACENT CONCRETE PAVEMENT. WHERE ADJACENT PAVEMENT IS ASPHALT WITH CRUSHED AGGREGATE BASE, TRANSVERSE CONTRACTION JOINTS SHALL BE PROVIDED AT 20 FOOT INTERVALS.
5. SURFACE TYPE AND DETAILS ARE DEFINED ELSEWHERE IN THE PLAN.

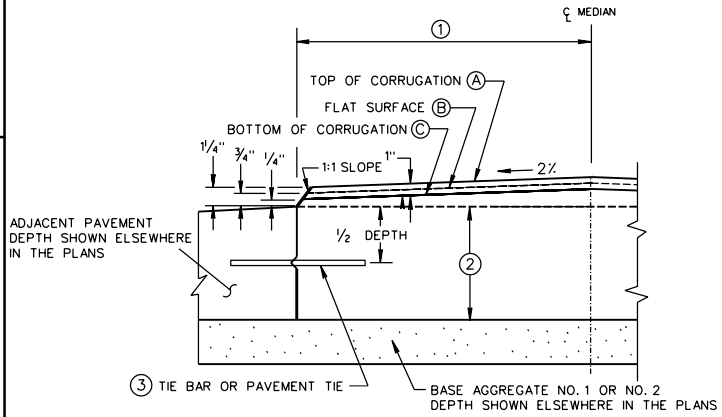

HALF CROSS SECTION

2 CONCRETE CORRUGATED MEDIAN AND ADJACENT PAVEMENT

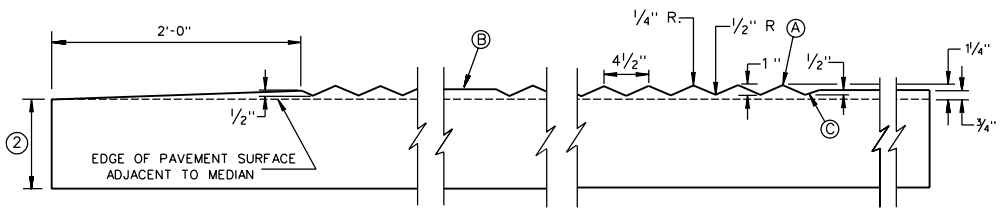

SECTION B-B

LONGITUDINAL SECTION

NO SCALE

City of Manitowoc
ENGINEERING DEPARTMENT

Rev. 4/05

FORM NO. 525

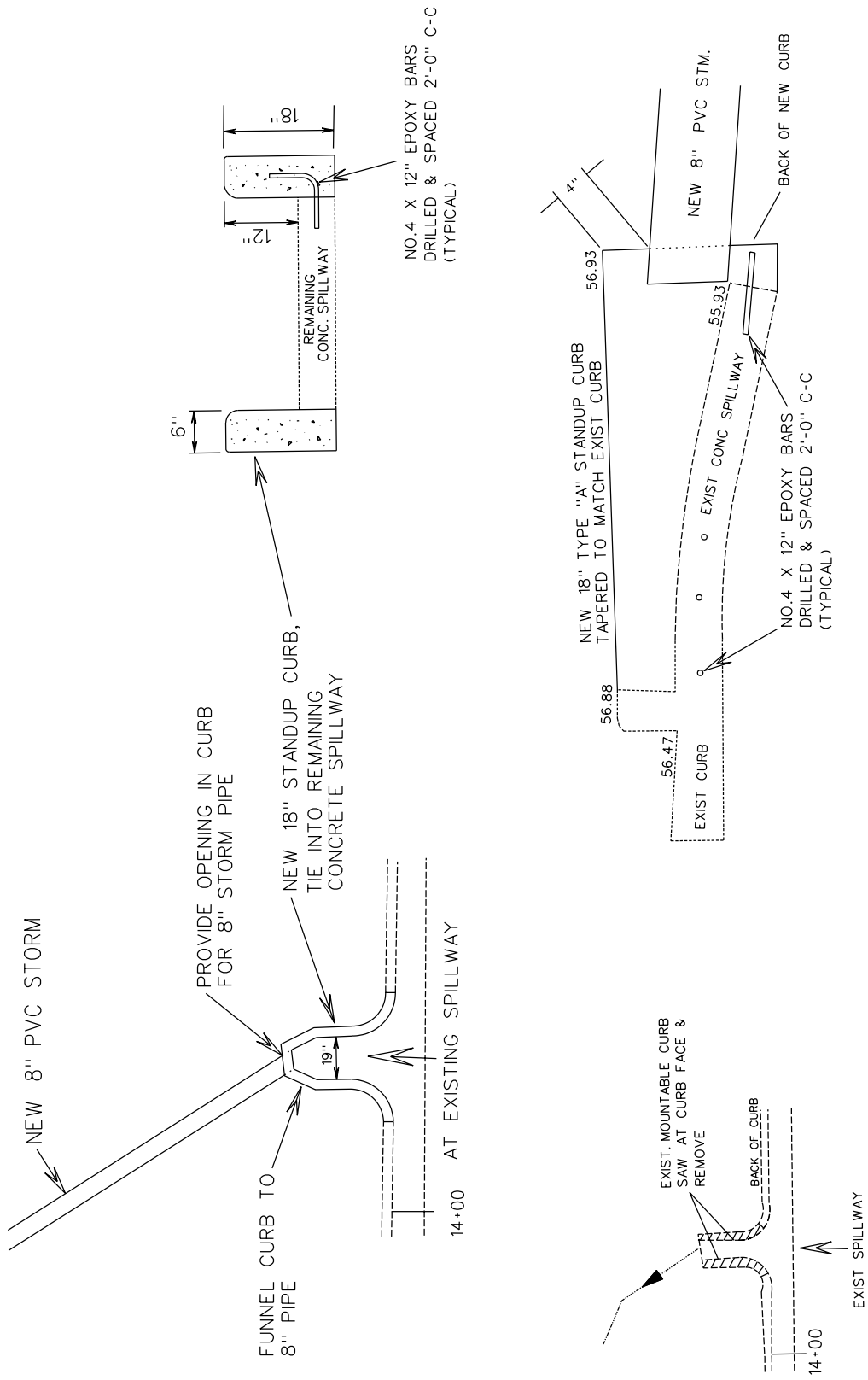

NO SCALE

ALTERATION TO EXIST. CONCRETE SPILLWAY

City of Manitowoc
ENGINEERING DEPARTMENT

Rev. 4/05

FORM NO.
527

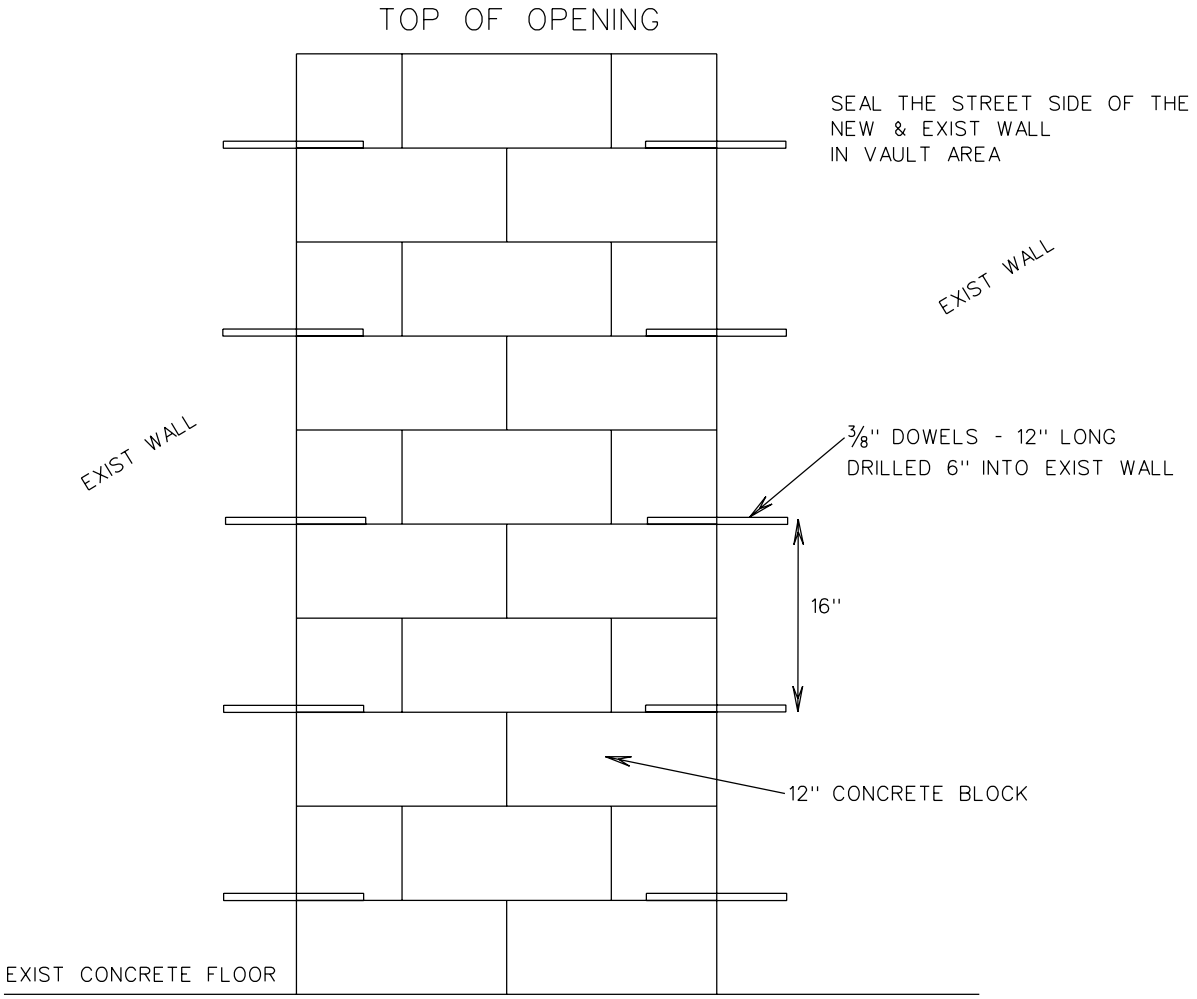

NO SCALE

BLOCKING UP EXISTING OPENINGS IN UNDERGROUND VAULTS

City of Manitowoc
ENGINEERING DEPARTMENT

Rev. 4/05

FORM NO.
528

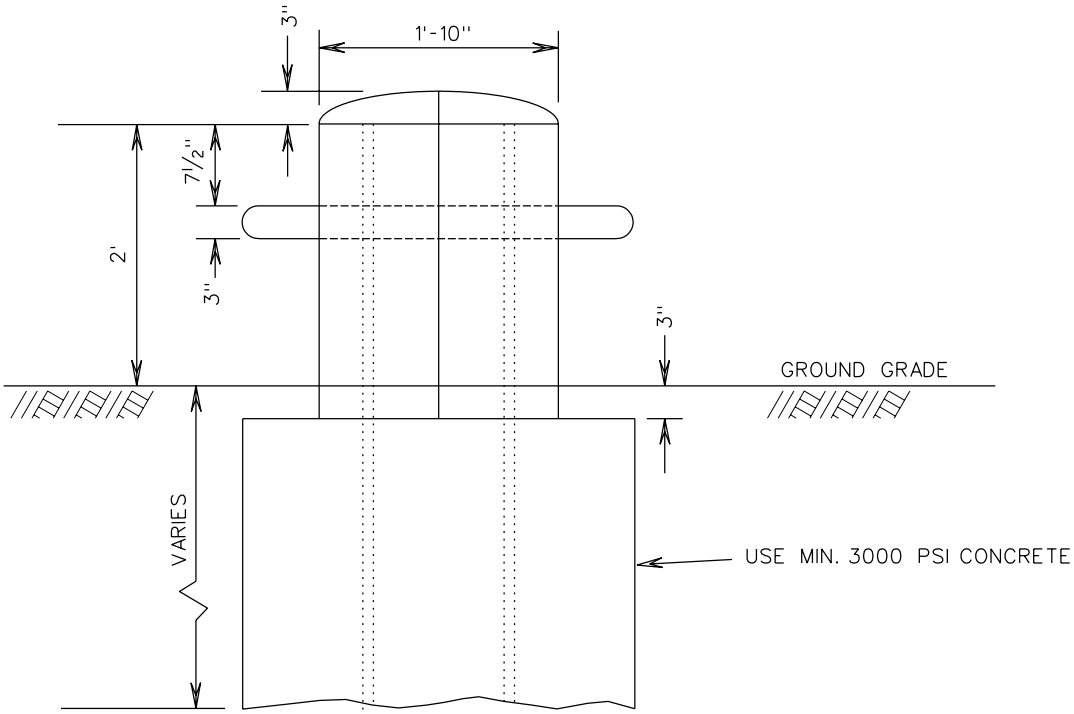

SIDE VIEW

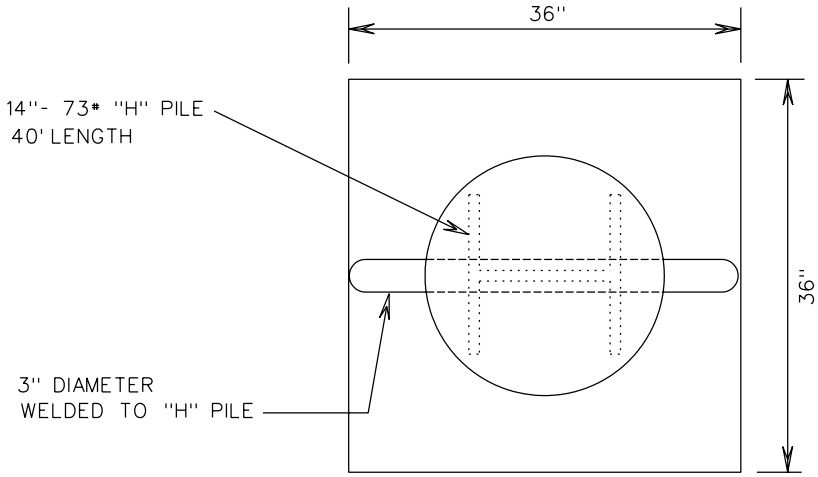

TOP VIEW

NO SCALE

MOORING PILE DETAIL
TYPE 1

City of Manitowoc
ENGINEERING DEPARTMENT

Rev. 4/05

FORM NO.
529

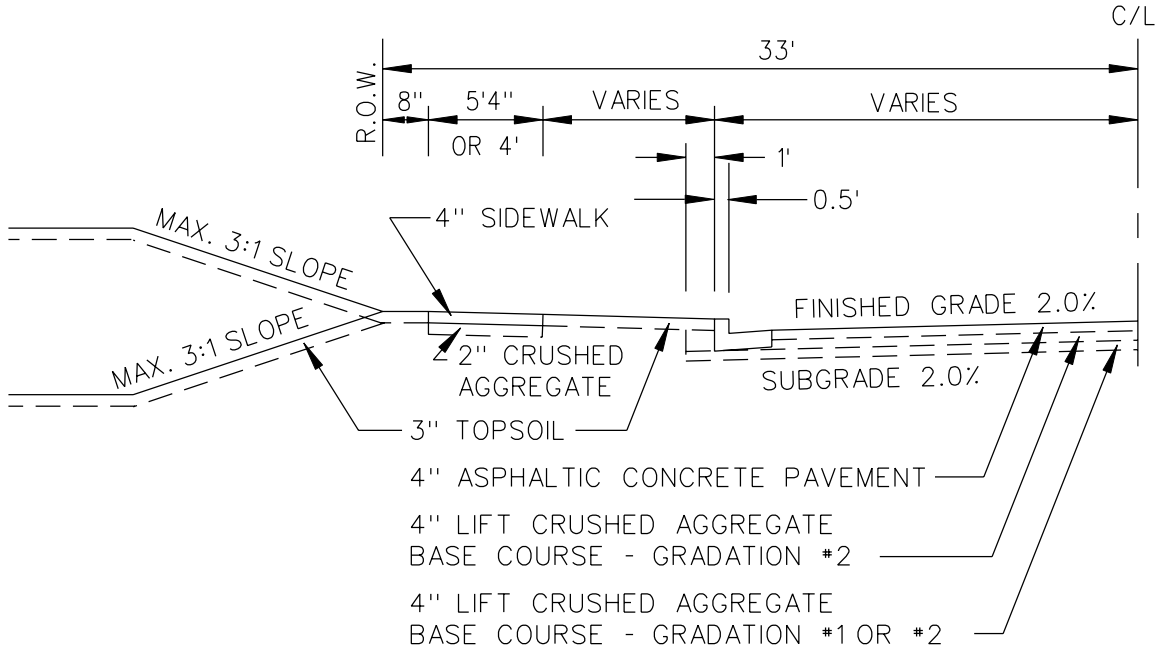

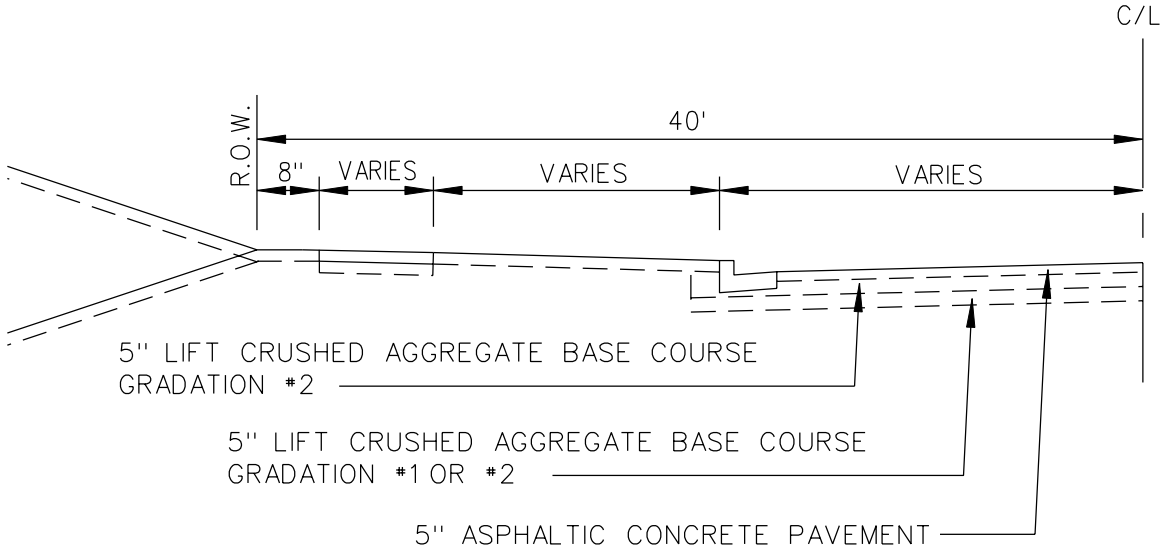

NOTES:

1.) ALL INFORMATION SHOWN ON THE UPPER SECTION IS TYPICAL FOR THE LOWER SECTION EXCEPT WHERE NOTED.

2.) THE STREET SIDE OF THE SIDEWALK SHALL BE AT LEAST 1/3 INCH ABOVE THE TOP OF THE CURB FOR EACH FOOT OF DISTANCE FROM THE FACE OF THE CURB.

NO SCALE

TYPICAL ASPHALT ROADWAY SECTIONS FOR 66' & 80' ROW

City of Manitowoc
ENGINEERING DEPARTMENT

Rev. 4/05

FORM NO. 601

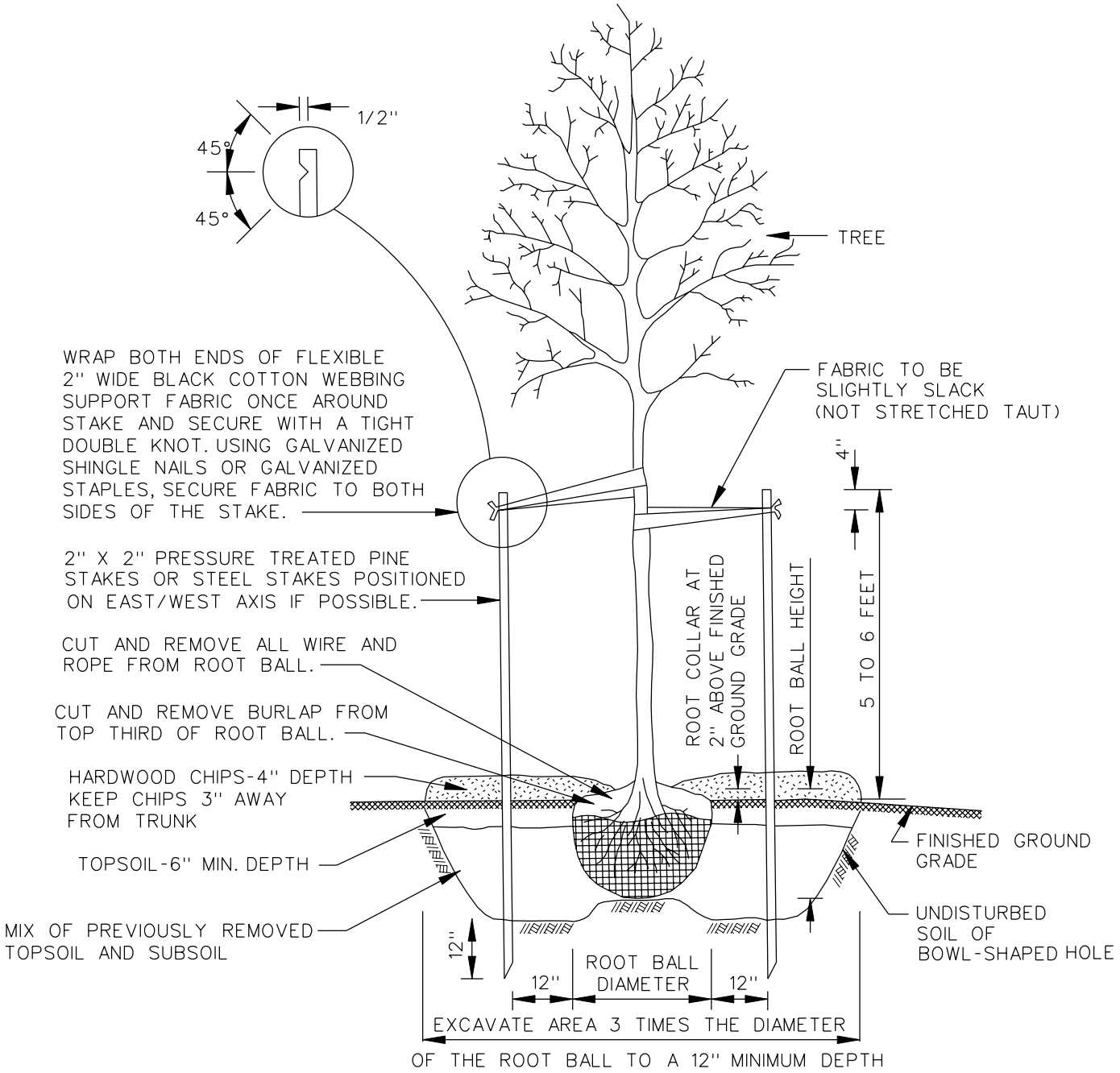

NOTES:

1) SET ROOT BALL ONTO MOUND OF UNDISTURBED SOIL. DO NOT EXCAVATE OR DISTURB THE SOIL DIRECTLY UNDER THE ROOT BALL. SET DEPTH OF HOLE SO THE ROOT COLLAR IS 2" ABOVE FINISHED GROUND GRADE.
2) SCARIFY SIDES OF EXCAVATED HOLE TO 1" MINIMUM DEPTH.
3) SCARIFY SIDES OF ROOT BALL BEFORE BACKFILLING TO RELEASE ROOTS.

NO SCALE

STANDARD TREE PLANTING DETAIL FOR BALLED & BURLAPPED TREES

City of Manitowoc
ENGINEERING DEPARTMENT

Rev. 4/05

FORM NO. 701

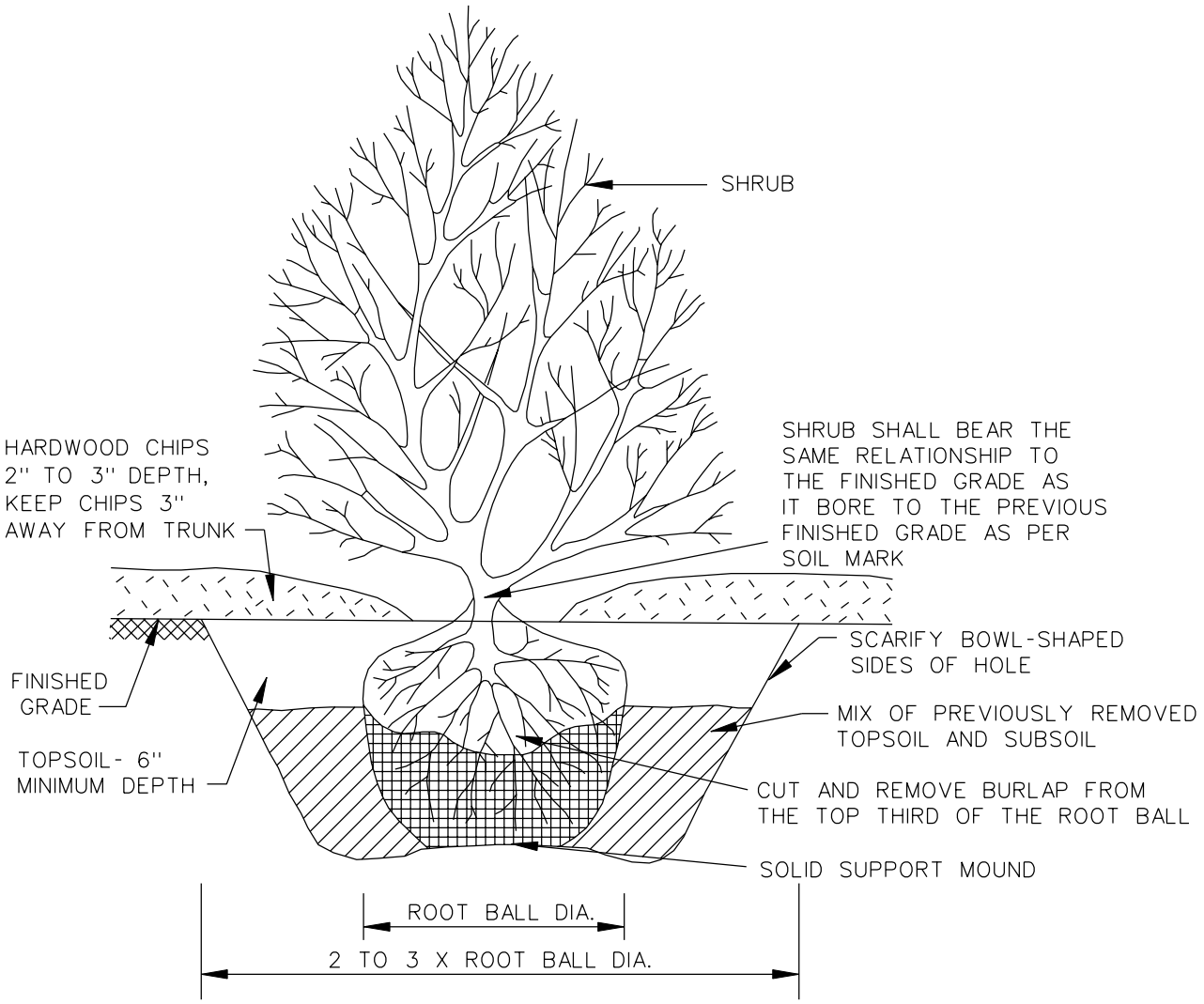

NO SCALE

STANDARD SHRUB PLANTING DETAIL

City of Manitowoc
ENGINEERING DEPARTMENT

Rev. 4/05

FORM NO. 702

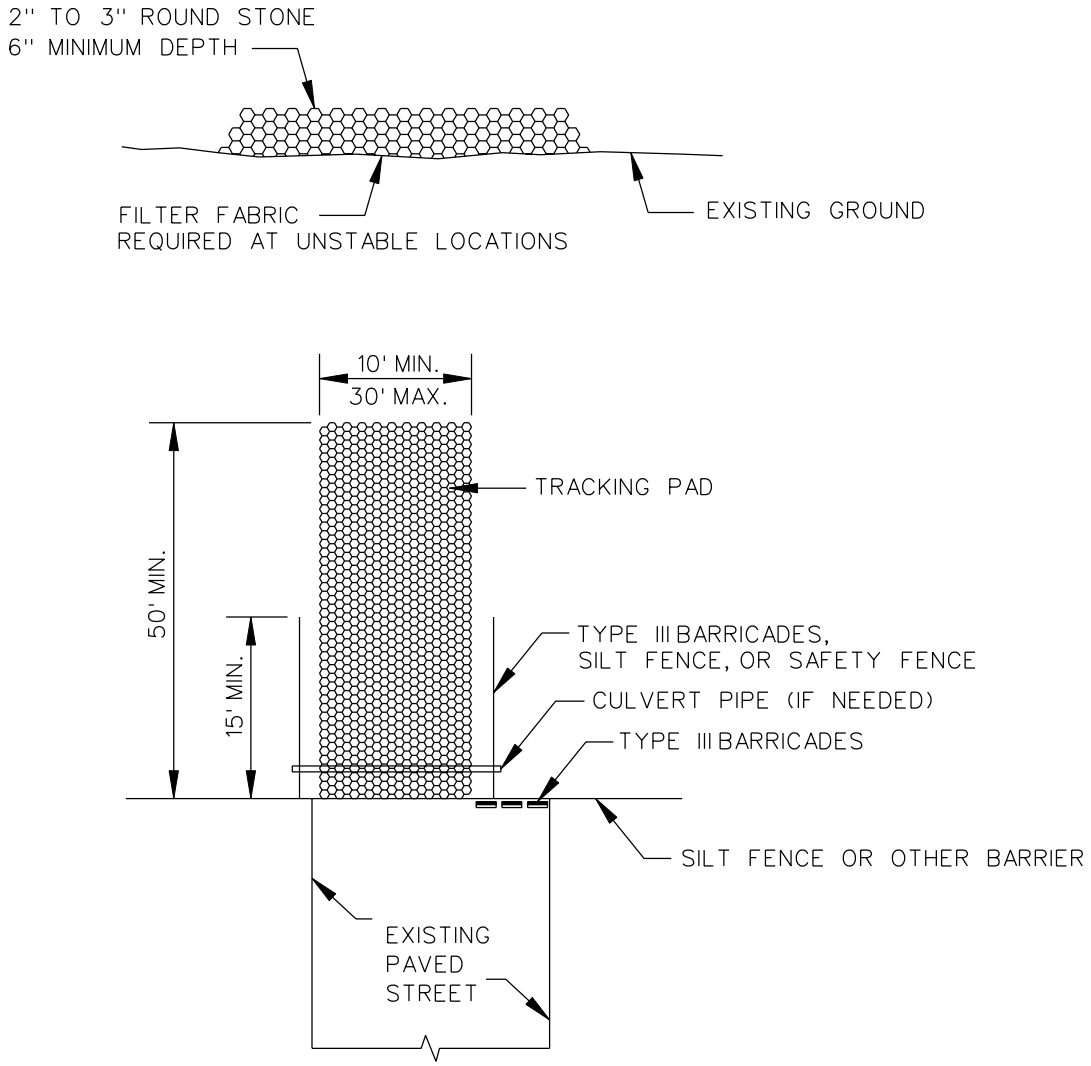

NO SCALE

STABILIZED CONSTRUCTION ENTRANCE (TRACKING PAD)

City of Manitowoc
ENGINEERING DEPARTMENT

Rev. 4/05

FORM NO.
801

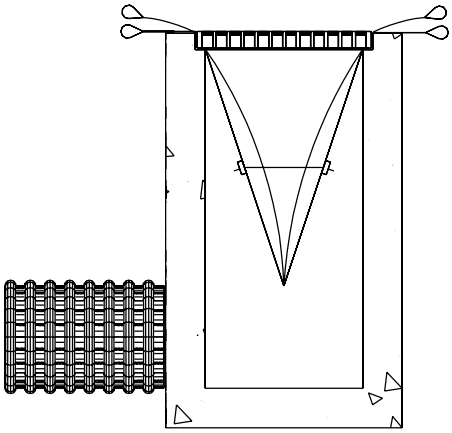

INSTALLATION DETAIL

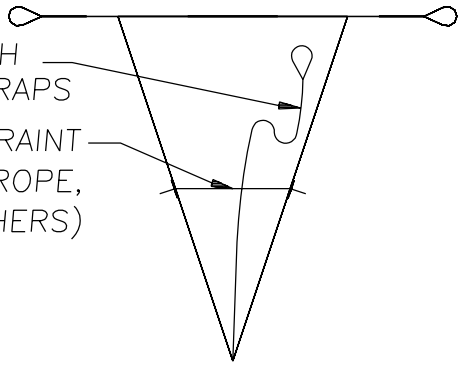

BAG DETAIL

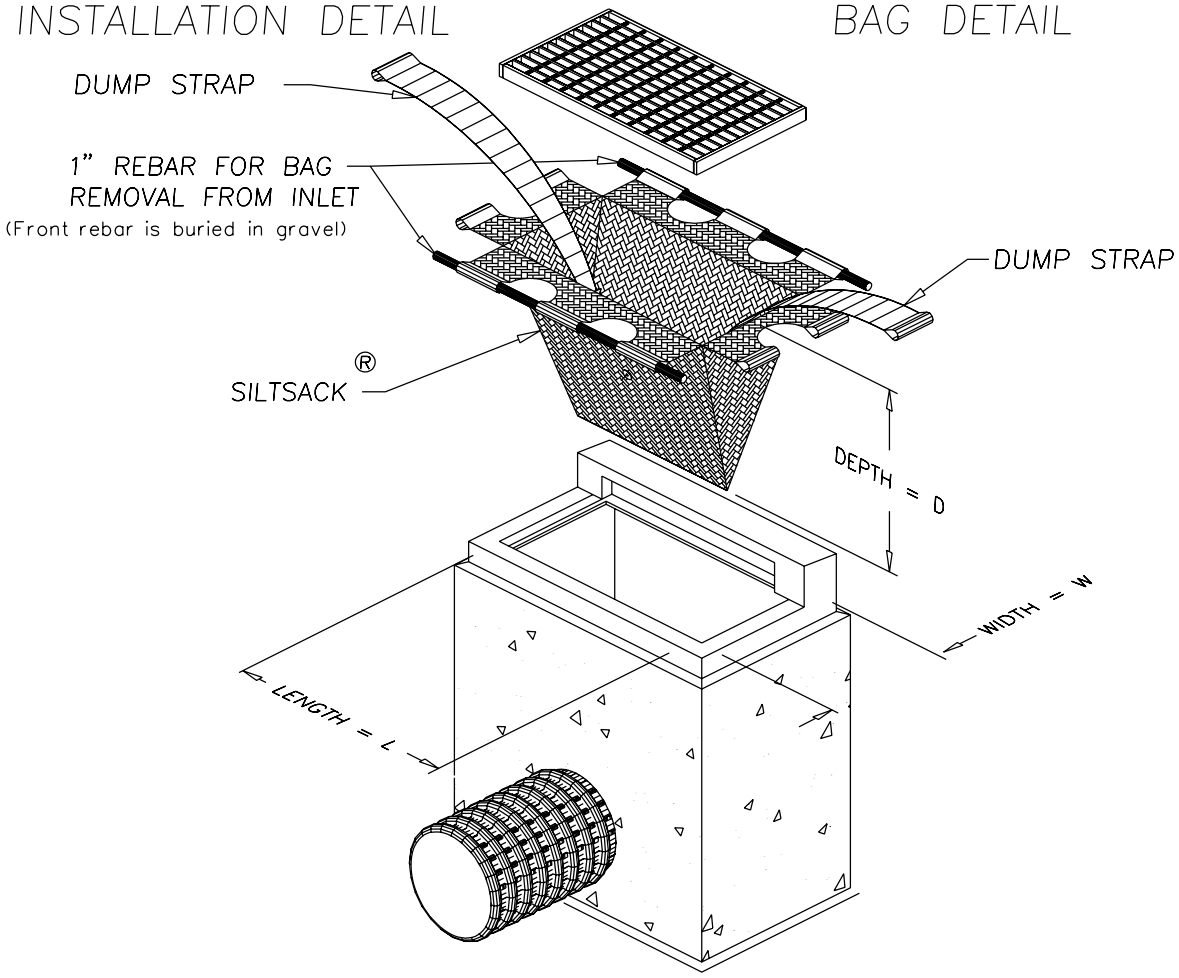

NO SCALE

INLET SEDIMENT CONTROL DEVICE (SILT SACK)

City of Manitowoc
ENGINEERING DEPARTMENT

Rev. 4/05

FORM NO.
802
(1 of 2)

SILTSACK®

SPECIFICATIONS

NOTE: THE SILTSACK® WILL BE MANUFACTURED FROM A WOVEN POLYPROPYLENE FABRIC THAT MEETS OR EXCEEDS THE FOLLOWING SPECIFICATIONS.

REGULAR FLOW SILTSACK®

(FOR AREAS OF LOW TO MODERATE PRECIPITATION AND RUN-OFF)

PROPERTIES	TEST METHOD	UNITS
GRAB TENSILE STRENGTH	ASTM D-4632	300 LBS
GRAB TENSILE ELONGATION	ASTM D-4632	20 %
PUNCTURE	ASTM D-4833	120 LBS
MULLEN BURST	ASTM D-3786	800 PSI
TRAPEZOID TEAR	ASTM D-4533	120 LBS
UV RESISTANCE	ASTM D-4355	80 %
APPARENT OPENING SIZE	ASTM D-4751	40 US SIEVE
FLOW RATE	ASTM D-4491	40 GAL/MIN/SQ FT
PERMITTIVITY	ASTM D-4491	0.55 SEC -1

HI-FLOW SILTSACK®

(FOR AREAS OF MODERATE TO HEAVY PRECIPITATION AND RUN-OFF)

PROPERTIES	TEST METHOD	UNITS
GRAB TENSILE STRENGTH	ASTM D-4632	265 LBS
GRAB TENSILE ELONGATION	ASTM D-4632	20 %
PUNCTURE	ASTM D-4833	135 LBS
MULLEN BURST	ASTM D-3786	420 PSI
TRAPEZOID TEAR	ASTM D-4533	45 LBS
UV RESISTANCE	ASTM D-4355	90 %
APPARENT OPENING SIZE	ASTM D-4751	20 US SIEVE
FLOW RATE	ASTM D-4491	200 GAL/MIN/SQ FT
PERMITTIVITY	ASTM D-4491	1.5 SEC -1

OIL-ABSORBANT SILTSACK®

(FOR AREAS WHERE THERE IS A CONCERN FOR OIL RUN-OFF OR SPILLS)

DEPENDING ON YOUR PARTICULAR APPLICATION, THE SILTSACK® CAN BE MADE FROM EITHER ONE OF THE ABOVE FABRICS WITH AN OIL-ABSORBANT PILLOW INSERT OR, MADE COMPLETELY FROM AN OIL-ABSORBANT SILTSACK®, WITH A WOVEN PILLOW INSERT.

INLET SEDIMENT CONTROL DEVICE

(SILT SACK)

City of Manitowoc

ENGINEERING DEPARTMENT

Rev. 4/05

FORM NO. 802 (2 of 2)

SILT FENCE INSTALLATION

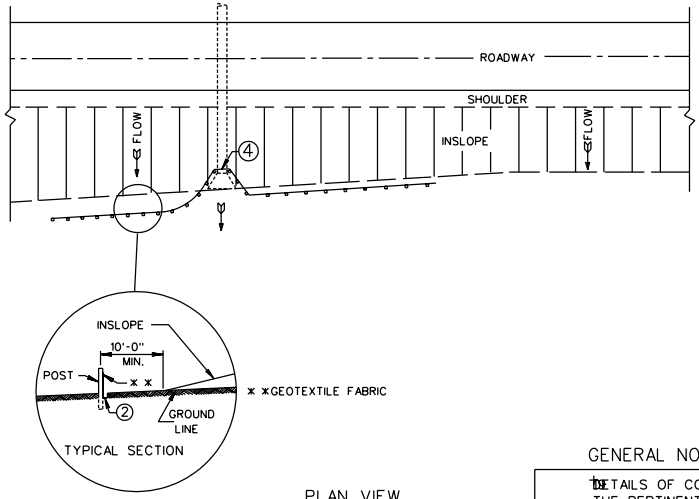

PLAN VIEW

TYPICAL APPLICATION OF SILT FENCE

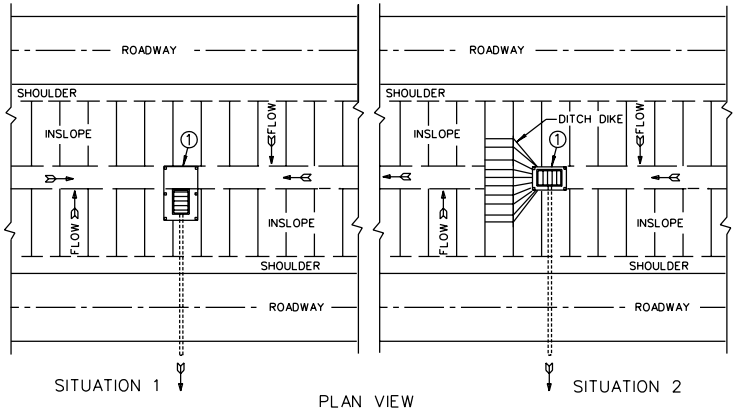

PLAN VIEW

SILT FENCE AT MEDIAN SURFACE DRAINS

GENERAL NOTES

DETAILS OF CONSTRUCTION NOT SHOWN ON THIS DRAWING SHALL CONFORM TO THE PERTINENT REQUIREMENTS OF THE STANDARD SPECIFICATIONS AND APPLICABLE SPECIAL PROVISIONS.

1. HORIZONTAL BRACE REQUIRED WITH 2" X 4" WOODEN FRAME OR EQUIVALENT AT TOP OF POSTS.
2. TRENCH SHALL BE A MINIMUM OF 4" WIDE & 6" DEEP TO BURY AND ANCHOR THE GEOTEXTILE FABRIC. FOLD MATERIAL TO FIT TRENCH AND BACKFILL & COMPACT TRENCH WITH EXCAVATED SOIL.
3. WOOD POSTS SHALL BE AMINIMUM SIZE OF 1⅛" X 1⅛" OF OAK OR HICKORY.
4. SILT FENCE TO EXTEND ACROSS THE TOP OF THE PIPE.

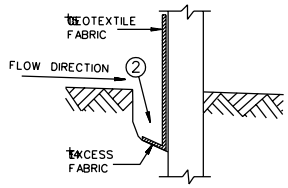

TRENCH DETAIL

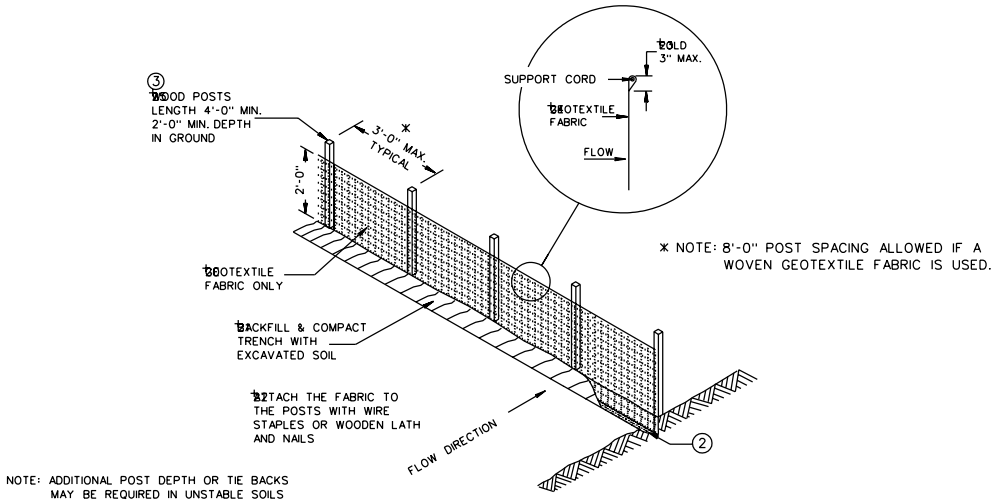

SILT FENCE

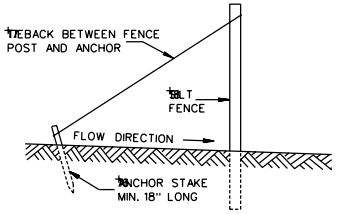

SILT FENCE TIE BACK
(WHEN REQUIRED BY THE ENGINEER)

NO SCALE

City of Manitowoc
ENGINEERING DEPARTMENT

FORM NO.
803

Rev. 4/05

INSTALLATION OF EROSION BALES AND TEMP. DITCH CHECKS

GENERAL NOTES

DETAILS OF CONSTRUCTION, MATERIALS AND WORKMANSHIP NOT SHOWN ON THIS DRAWING SHALL CONFORM TO THE PERTINENT REQUIREMENTS OF THE STANDARD SPECIFICATIONS AND THE APPLICABLE SPECIAL PROVISIONS.

TEMPORARY DITCH CHECKS EITHER EROSION BALES OR MANUFACTURED SHALL BE PAID FOR UNDER THE BID ITEM OF EACH BALE INSTALLED.

(1) CONTRACTOR REQUIRED TO INSTALL ONE ROW OF BALES UNLESS ENGINEER DETERMINES OTHERWISE.

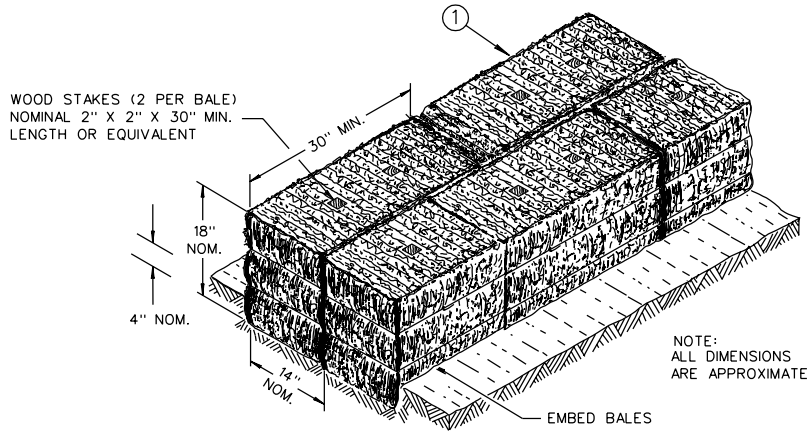

SECTION A-A

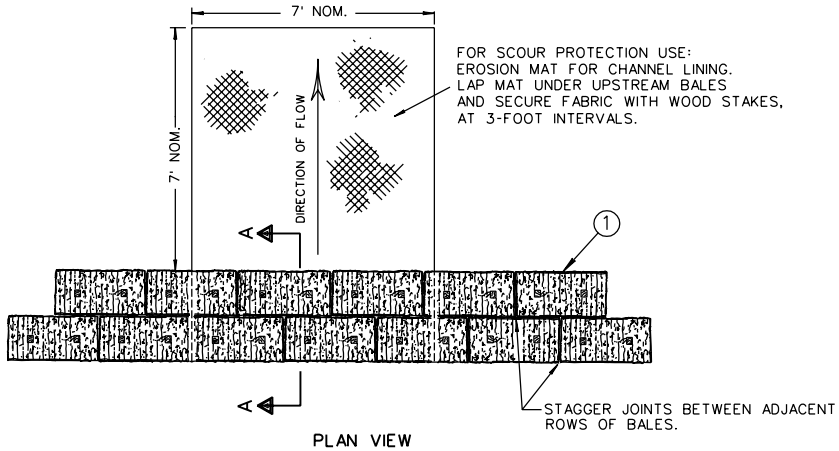

PLAN VIEW

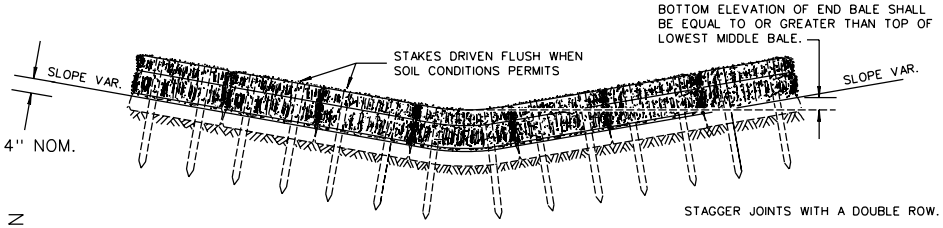

FRONT ELEVATION

TEMPORARY DITCH CHECK USING EROSION BALES

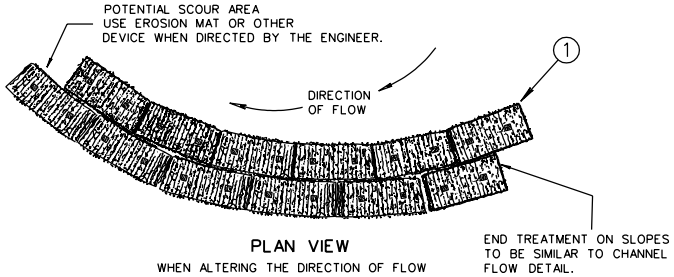

PLAN VIEW

WHEN ALTERING THE DIRECTION OF FLOW

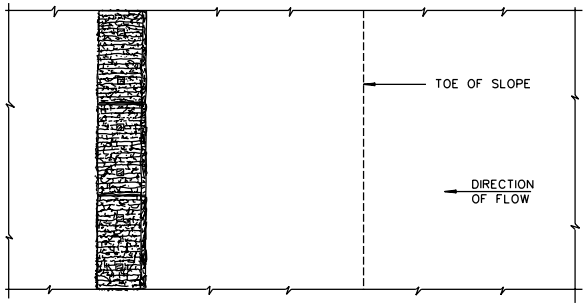

PLAN VIEW

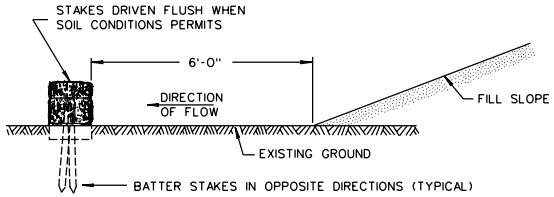

FRONT ELEVATION

WHEN EXISTING GROUND SLOPES AWAY FROM FILL SLOPE

EROSION BALES FOR SHEET FLOW

NO SCALE

City of Manitowoc
ENGINEERING DEPARTMENT

Rev. 4/05

FORM NO. 804

INLET PROTECTION TYPE A, B, AND C

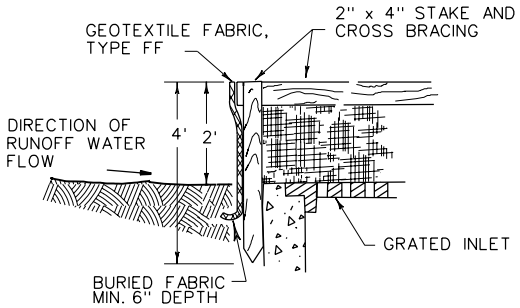

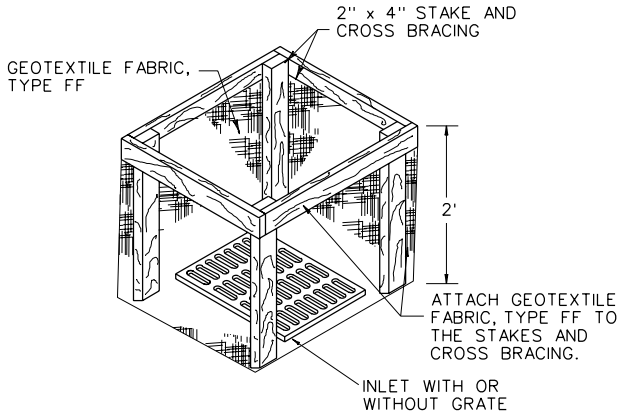

INLET PROTECTION, TYPE A

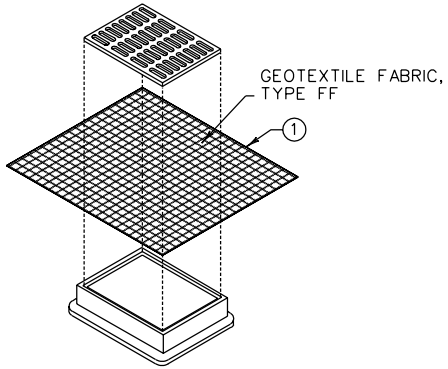

INLET PROTECTION, TYPE B (WITHOUT CURB BOX)

(CAN BE INSTALLED IN ANY INLET WITHOUT A CURB BOX)

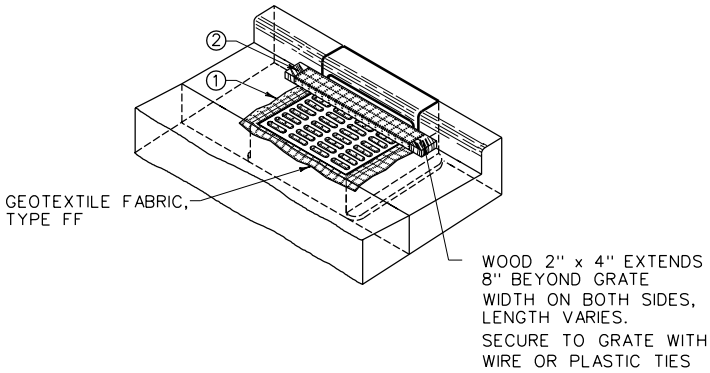

INLET PROTECTION, TYPE C (WITH CURB BOX)

GENERAL NOTES

INLET PROTECTION DEVICES SHALL BE MAINTAINED OR REPLACED AT THE DIRECTION OF THE ENGINEER.

MANUFACTURED ALTERNATIVES APPROVED AND LISTED ON THE DEPARTMENT'S EROSION CONTROL PRODUCT ACCEPTABILITY LIST MAY BE SUBSTITUTED.

WHEN REMOVING OR MAINTAINING INLET PROTECTION, CARE SHALL BE TAKEN SO THAT THE SEDIMENT TRAPPED ON THE GEOTEXTILE FABRIC DOES NOT FALL INTO THE INLET. ANY MATERIAL FALLING INTO THE INLET SHALL BE REMOVED IMMEDIATELY.

① FINISHED SIZE, INCLUDING FLAP POCKETS WHERE REQUIRED, SHALL EXTEND A MINIMUM OF 10" AROUND THE PERIMETER TO FACILITATE MAINTENANCE OR REMOVAL.

② FOR INLET PROTECTION, TYPE C (WITH CURB BOX), AN ADDITIONAL 18" OF FABRIC IS WRAPPED AROUND THE WOOD AND SECURED WITH STAPLES. THE WOOD SHALL NOT BLOCK THE ENTIRE HEIGHT OF THE CURB BOX OPENING.

INSTALLATION NOTES

TYPE B & C

TRIM EXCESS FABRIC IN THE FLOW LINE TO WITHIN 3" OF THE GRATE.

THE CONTRACTOR SHALL DEMONSTRATE A METHOD OF MAINTENANCE, USING A SEWN FLAP, HAND HOLDS OR OTHER METHOD TO PREVENT ACCUMULATED SEDIMENT FROM ENTERING THE INLET.

NO SCALE

City of Manitowoc
ENGINEERING DEPARTMENT

Rev. 4/05

FORM NO. 805

SIGNING AND PAVEMENT MARKING FOR RAILROAD-HIGHWAY CROSSINGS

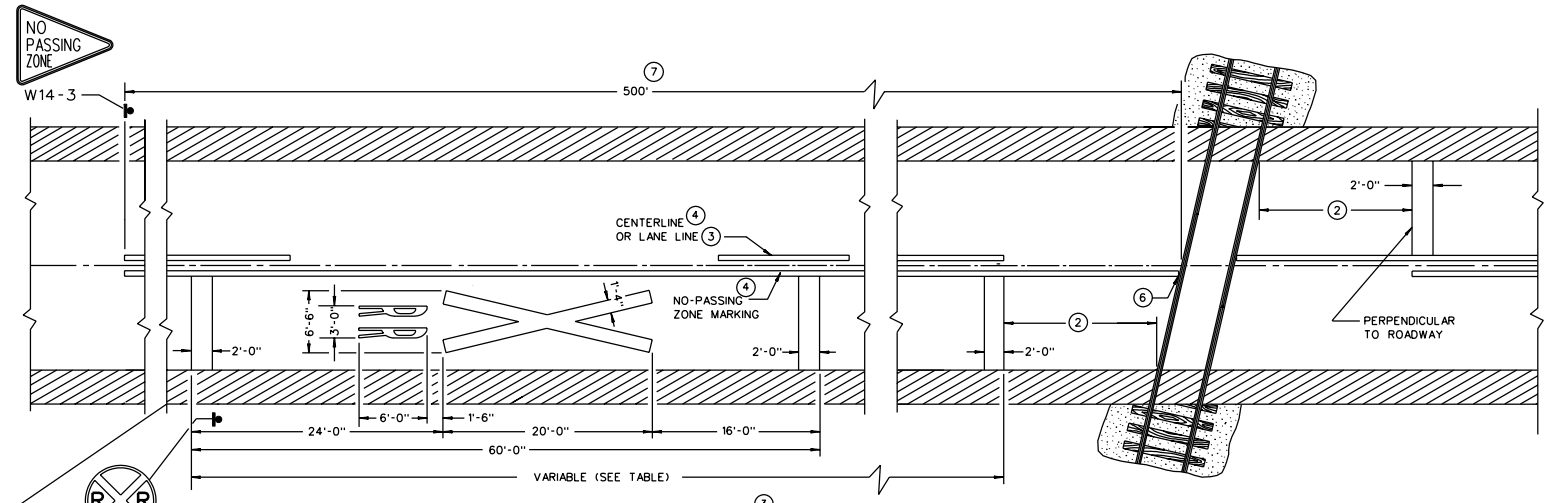

PREFERRED PAVEMENT MARKING 3

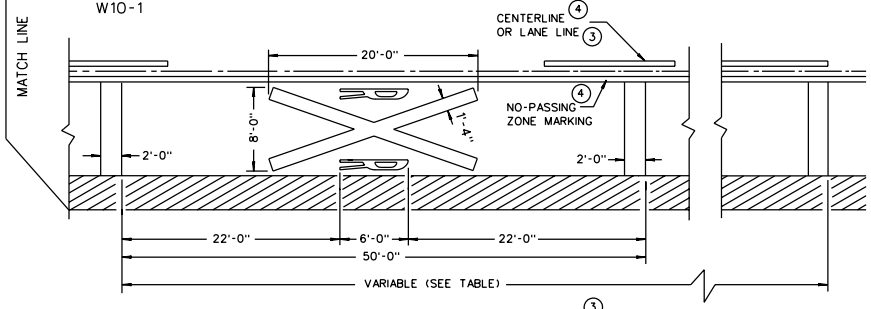

ALTERNATE PAVEMENT MARKING 3

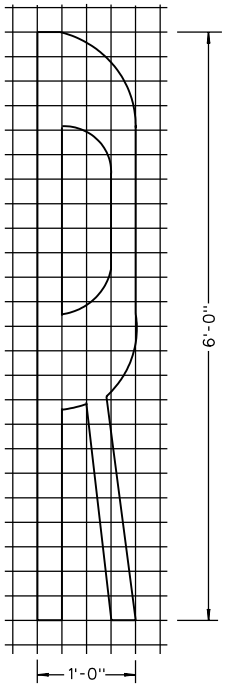

GENERAL NOTES

DETAILS OF CONSTRUCTION, MATERIALS, AND WORKMANSHIP NOT SHOWN ON THIS DRAWING SHALL CONFORM TO THE PERTINENT REQUIREMENTS OF THE STANDARD SPECIFICATIONS AND THE APPLICABLE SPECIAL PROVISIONS.

A THREE-LANE ROADWAY SHOULD BE MARKED WITH A CENTERLINE FOR TWO-LANE APPROACH OPERATION ON THE APPROACH TO A CROSSING.

ON MULTI-LANE ROADS THE TRANSVERSE BANDS SHOULD EXTEND ACROSS ALL APPROACH LANES, AND INDIVIDUAL R X R SYMBOLS SHOULD BE USED IN EACH APPROACH LANE. ALL LETTERS AND SYMBOLS SHALL BE IN CONFORMANCE WITH THE "STANDARD ALPHABETS FOR HIGHWAY SIGNS AND PAVEMENT MARKINGS" (ADOPTED BY THE FEDERAL HIGHWAY ADMINISTRATION).

CENTER OR LANE LINES AND NO-PASSING ZONE MARKINGS SHOWN ON THIS DRAWING ARE REQUIRED AND PAID FOR UNDER OTHER ITEMS IN THE CONTRACT.

1. A PORTION OF THE PAVEMENT MARKING SYMBOL SHOULD BE DIRECTLY OPPOSITE THE ADVANCE WARNING SIGN (W10-1).
2. MINIMUM 8' FROM ANY RAILROAD WARNING DEVICES (SIGNALS, GATES, ETC.) OR 25' FROM THE NEAREST RAIL, WHICHEVER DISTANCE IS GREATER.
3. REFLECTIVE WHITE.
4. REFLECTIVE YELLOW.
5. TABLE BASED UPON 2C-4 WISCONSIN SUPPLEMENT OF MANUAL ON UNIFORM TRAFFIC CONTROL DEVICES.
6. FOR MULTIPLE TRACK CROSSINGS, THE BARRIER LINE SHALL EXTEND TO THE NEAR RAIL OF THE FURTHEST TRACK IN THE DIRECTION OF HIGHWAY TRAVEL.
7. MARKING LIMITS MAY BE EXTENDED AS DIRECTED BY THE ENGINEER TO MEET ADJACENT NO-PASSING ZONE MARKINGS.

5

Posted Speed (M.P.H.)	Variable Dimension (Feet)
25	150
30	200
35	250
40	300
45	400
50	550
55	750
60	1000
65	1000

NO SCALE

City of Manitowoc
ENGINEERING DEPARTMENT

Rev. 4/05

FORM NO. 901

PAVEMENT MARKING SYMBOLS

GENERAL NOTES

DETAILS OF INSTALLATION, MATERIALS AND WORKMANSHIP NOT SHOWN ON THIS DRAWING SHALL CONFORM TO THE PERTINENT REQUIREMENTS OF THE STANDARD SPECIFICATIONS AND APPLICABLE SPECIAL PROVISIONS.

ALL LETTERS AND SYMBOLS SHALL BE IN CONFORMANCE WITH REQUIREMENTS INCLUDED IN "STANDARD ALPHABETS FOR HIGHWAY SIGNS AND PAVEMENT MARKING" BY THE FEDERAL HIGHWAY ADMINISTRATION. ALL LETTERS, ARROWS AND SYMBOLS SHALL BE WHITE AND REFLECTORIZED.

A DETAILED DRAWING OF THE HANDICAPPED PARKING SYMBOL IS ILLUSTRATED IN THE "STANDARD HIGHWAY SIGNS MANUAL" BY THE FEDERAL HIGHWAY ADMINISTRATION.

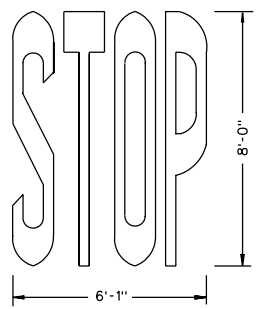

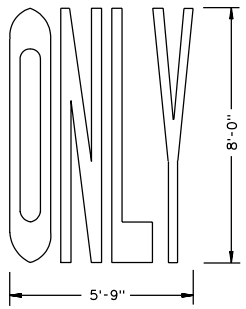

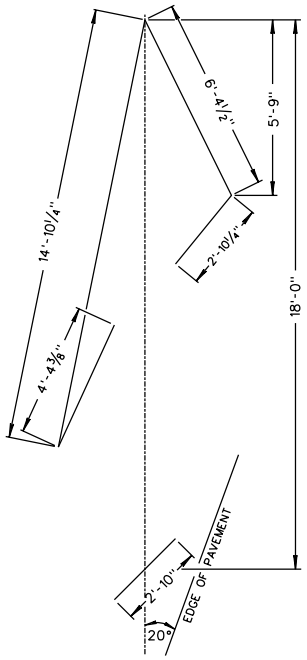

TYPE 5 LANE DROP ARROW

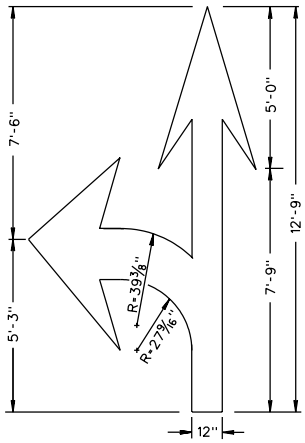

TYPE 3

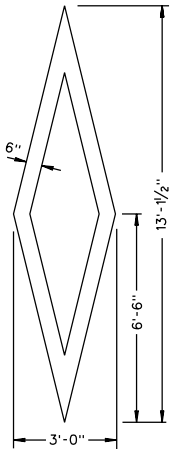

PREFERENTIAL LANE SYMBOL

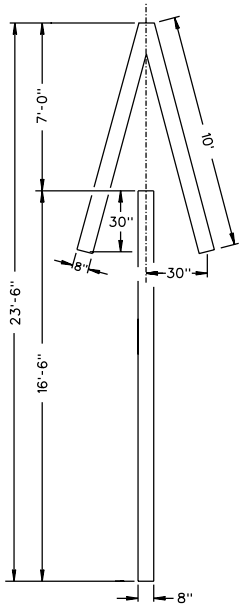

TYPE 4

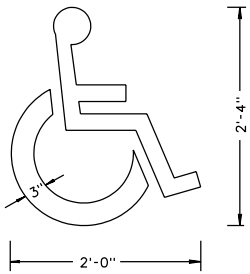

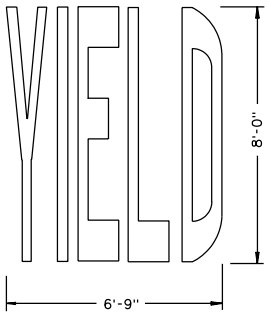

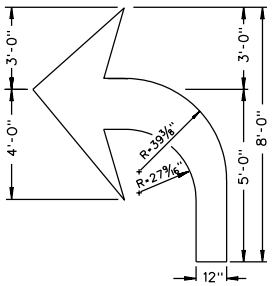

TYPE 2

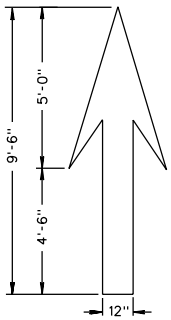

TYPE 1

NO SCALE

City of Manitowoc
ENGINEERING DEPARTMENT

FORM NO.
902

Rev. 4/05

PAVEMENT MARKING (MAINLINE)

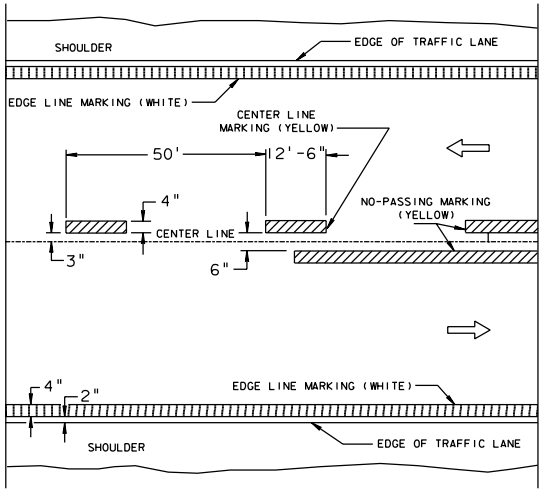

TWO WAY TRAFFIC

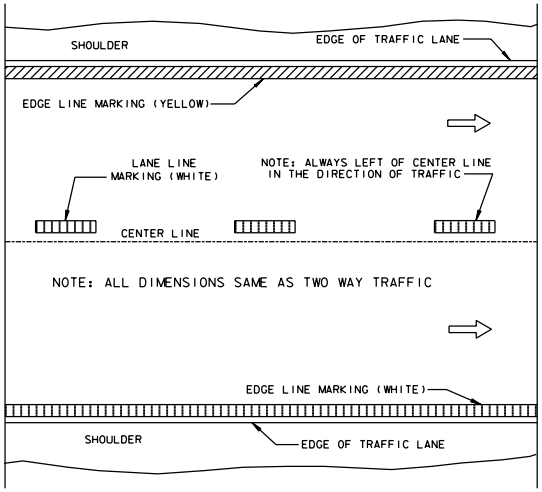

ONE WAY TRAFFIC

PERMANENT PAVEMENT MARKING

GENERAL NOTES

DETAILS OF CONSTRUCTION NOT SHOWN ON THIS DRAWING SHALL CONFORM TO STANDARD SPECIFICATIONS AND SPECIAL PROVISIONS.

(1) HALF CYCLE LENGTHS (25'±) WITH 2' MINIMUM STRIPE LENGTHS SHALL BE PROVIDED ON ROADWAYS (INCLUDING TEMPORARY TRAVELED WAYS) WITH REVERSE CURVATURE, CURVATURE OF OVER 5 DEGREES OR WHEN DIRECTED BY THE ENGINEER TO MARK UNUSUAL ALIGNMENTOF THE TRAVELED WAY.

(2) NO PASSING ZONE TEMPORARY PAVEMENT MARKING IS REQUIRED TO BE PLACED, WHERE APPROPRIATE, ALONG WITH CENTERLINE TEMPORARY PAVEMENT MARKING WHEN A SAME DAY PERMANENT PAVEMENT MARKING ITEM IS INCLUDED IN THE CONTRACT.

NOTE

ARROW SYMBOL (⇨) SHOWS DIRECTION OF TRAVEL.

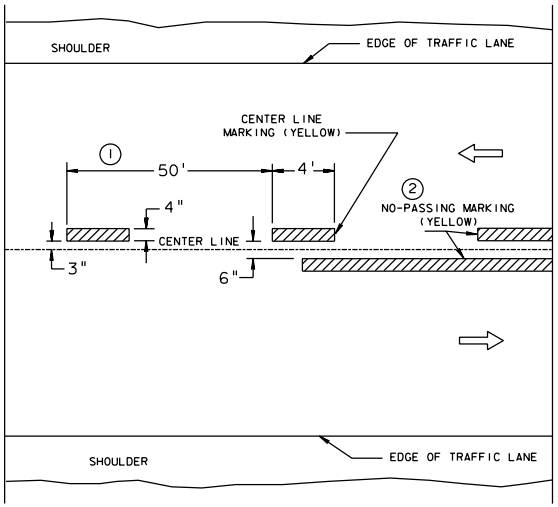

TWO WAY TRAFFIC

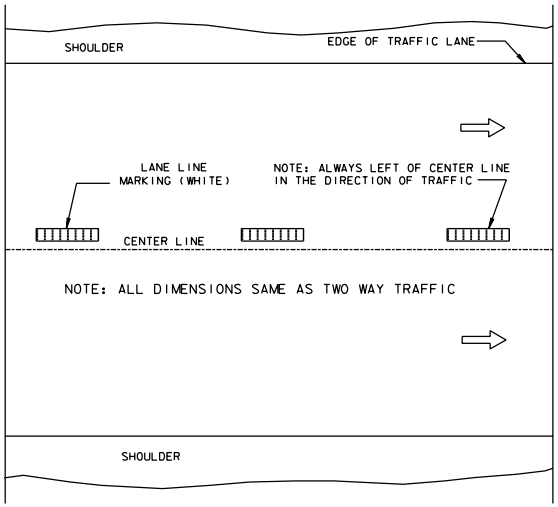

ONE WAY TRAFFIC

TEMPORARY (INTERMEDIATE) PAVEMENT MARKING

(SHOWS CYCLE FOR TEMPORARY CENTER LINE OR TEMPORARY LANE LINE MARKING)

NO SCALE

City of Manitowoc
ENGINEERING DEPARTMENT

FORM NO. 903

Rev. 4/05

PAVEMENT MARKING
(ISLANDS, STOP LINE & CROSSWALK)

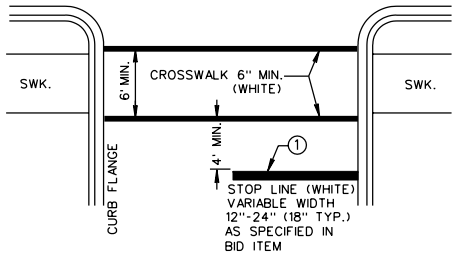

1 STOP LINE IS REQUIRED ONLY WHEN SPECIFIED IN THE CONTRACT.

STOP LINE AND CROSSWALK

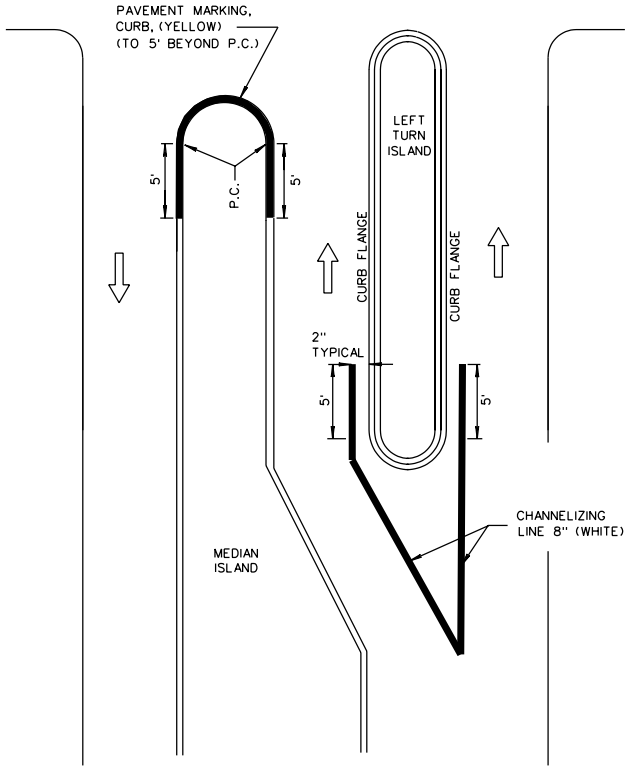

LEFT TURN & MEDIAN ISLAND

NOTE:
ARROW SYMBOL ⇨
SHOWS DIRECTION OF TRAVEL

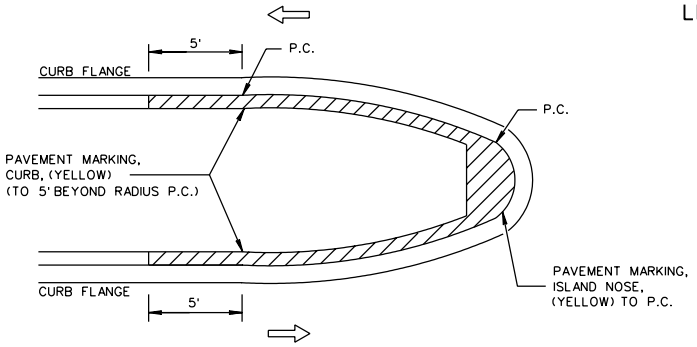

MEDIAN ISLAND WITH SLOPED NOSE

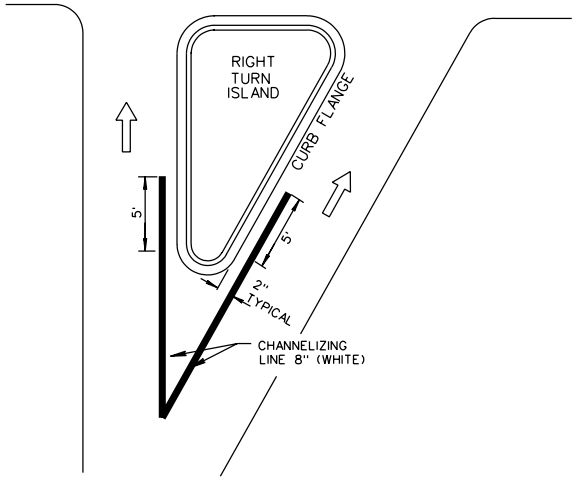

RIGHT TURN ISLAND

NO SCALE

City of Manitowoc
ENGINEERING DEPARTMENT

Rev. 4/05

FORM NO.
904

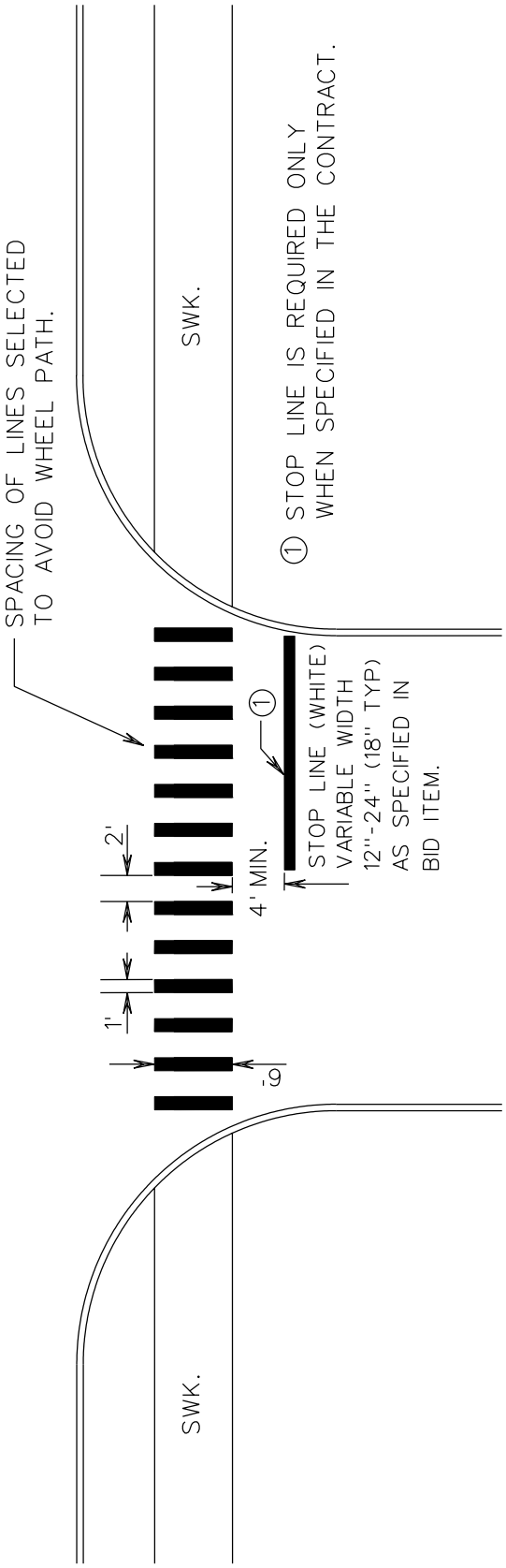

1 STOP LINE IS REQUIRED ONLY WHEN SPECIFIED IN THE CONTRACT.

ALTERNATE 12 INCH CROSSWALK MARKINGS

NO SCALE

PAVEMENT MARKING
ALTERNATE 12" CROSSWALK

City of Manitowoc
ENGINEERING DEPARTMENT

Rev. 4/05

FORM NO.
905

TUBULAR STEEL SIGN POST

TELESCOPIC TUBING ANCHORS
TWO PIECE SYSTEM

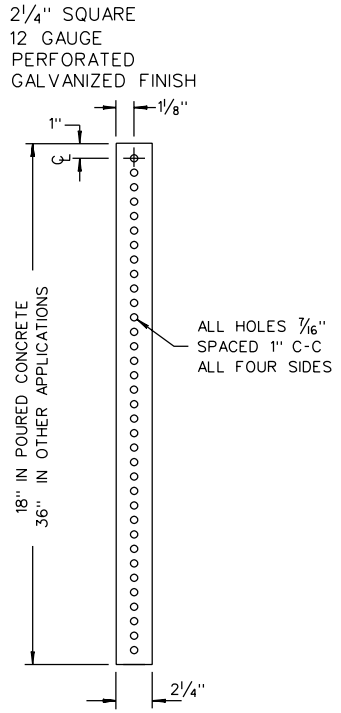

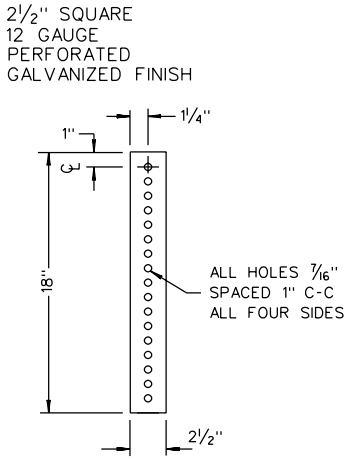

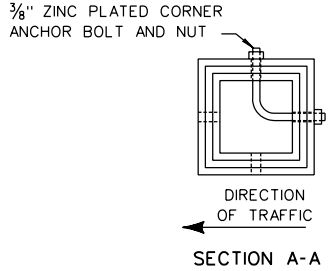

SECTION A-A

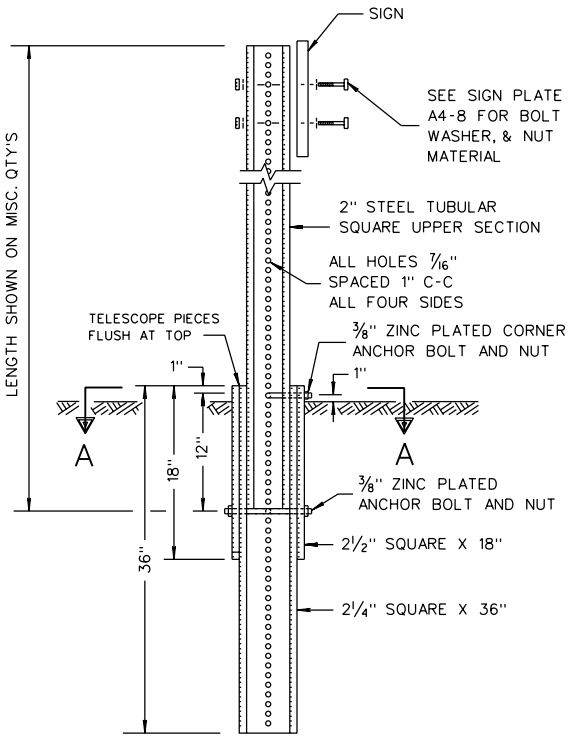

DETAIL OF TUBULAR STEEL SIGN POST
(IN OTHER INSTALLATIONS)

NOTE:
BOTH THE ANCHOR SECTION AND OUTER SLEEVE SHALL BE LEFT A MAXIMUM OF 2" ABOVE THE SURFACE.

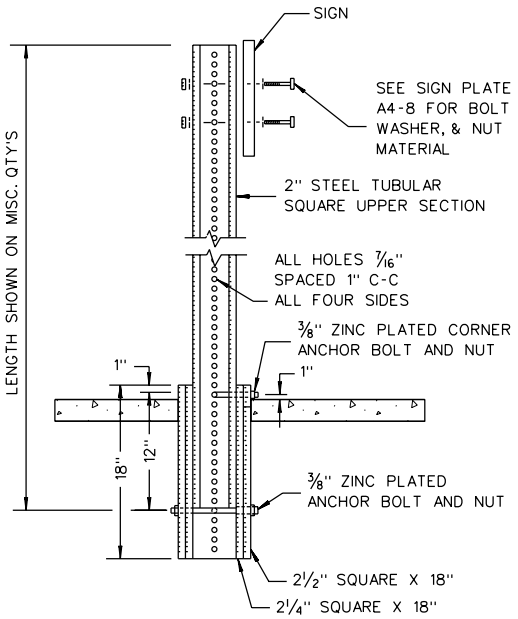

DETAIL OF TUBULAR STEEL SIGN POST
(IN POURED CONCRETE)

NO SCALE

City of Manitowoc
ENGINEERING DEPARTMENT

Rev. 4/05

FORM NO.
906

SIGNAL CONCRETE BASES

TYPES 1, 2 & 5

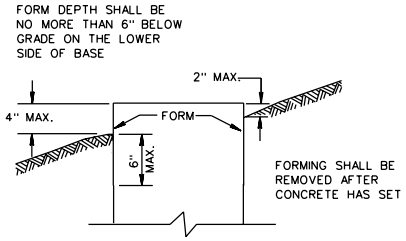

FORMING DETAIL

GENERAL NOTES

DETAILS OF CONSTRUCTION, MATERIALS AND WORKMANSHIP NOT SHOWN ON THIS DRAWING SHALL CONFORM TO THE PERTINENT REQUIREMENTS OF THE CONTRACT.

BASES SHALL BE EXCAVATED BY USE OF A CIRCULAR AUGER.

TOP SURFACES OF CONCRETE BASES SHALL BE TROWEL FINISHED AND LEVEL.

CONDUIT SIZES AND LOCATIONS SHALL BE AS SHOWN ON THE PLANS.

THE FINAL OR TERMINATING CONCRETE BASE IN A CONDUIT RUN SHALL HAVE A 6" EXIT STUB INSTALLED FOR FUTURE CABLING USE. THE EXIT STUB SHALL BE SIZED AS USED THROUGHOUT THE CONDUIT RUN AS SHOWN AT THE ENTRANCE OF THE BASE.

MINIMUM BENDING RADIUS OF CONDUIT IS EQUAL TO 6 X THE DIAMETER.

CONDUIT HEIGHT ABOVE CONCRETE BASES SHALL BE 1 INCH. ALL METALLIC CONDUIT ENDS SHALL BE REAMED AND THREADED.

ALL CONDUIT ENDS AT THE TOP OF CONCRETE BASES SHALL BE CAPPED IF METALLIC OR PLUGGED IF NONMETALLIC IMMEDIATELY AFTER PLACEMENT AND BEFORE CONCRETE IS POURED. CONDUITS IN WHICH WIRE OR CABLE IS NOT INSTALLED SHALL REMAIN CAPPED OR PLUGGED.

BELL ENDS SHALL BE INSTALLED ON ALL PVC CONDUIT EXPOSED AT THE TOP OF CONCRETE BASES BEFORE INSTALLATION OF CABLE OR WIRE.

ENDS OF CONDUIT INSTALLED BELOW GRADE FOR FUTURE USE SHALL BE CAPPED IF METALLIC OR PLUGGED IF NONMETALLIC.

GENERAL NOTES (CONTINUED)

WHEN REQUIRED TO CONNECT NONMETALLIC CONDUIT TO METALLIC CONDUIT, ONLY ADAPTER FITTINGS, U.L. LISTED FOR ELECTRICAL USE, SHALL BE USED.

IF A BASE REQUIRES A DEEP FORM BECAUSE OF LOOSE DIRT OR FILL, THE FORM SHALL BE REMOVED BEFORE BACKFILLING AROUND THE BASE. BACKFILL SHALL BE TAMPED TIGHT AGAINST THE BARE CONCRETE BASE IN LAYERS OF 1 FOOT OR LESS.

A NO. 4 AWG, STRANDED COPPER EQUIPMENT GROUNDING CONDUCTOR SHALL BE EXOTHERMICALLY WELDED TO THE EQUIPMENT GROUNDING ELECTRODE (GROUND ROD) FOR TYPE 2 AND TYPE 5 BASES.

THE EQUIPMENT GROUNDING CONDUCTOR SHALL BE FURNISHED AND INSTALLED TO ENTER THE BASE OF THE TYPE 2 AND TYPE 5 BASES THROUGH A 1 INCH CONDUIT INSTALLED FOR GROUNDING PURPOSES, LEAVING A 4 FOOT COIL OF WIRE ABOVE THE CONCRETE BASE. THE EQUIPMENT GROUNDING CONDUCTOR SHALL BE NEATLY COILED AND THE COILS TIED TOGETHER.

ANCHOR RODS SHALL BE THREADED 12" IN LENGTH ON EACH END OF THE ROD. ANCHOR RODS SHALL BE MANUFACTURED IN ACCORDANCE WITH SECTION 654.2.1 AND 641.2.2 OF THE STANDARD SPECIFICATIONS, ASTM A-449, OR ASTM A-687 (GRADE 105).

WASHERS AND LOCK WASHERS ARE REQUIRED ON ALL ANCHOR RODS.

WHEN ANCHOR RODS USING THE ALTERNATE "L" BEND ARE FURNISHED, THE 4" "L" BEND SHALL BE IN ADDITION TO THE SPECIFIED ANCHOR ROD BAR LENGTH. THE "L" BEND END SHALL NOT BE THREADED.

WELDING OF THE ANCHOR RODS TO THE CAGE IS UNACCEPTABLE. TIE WIRES SHALL BE USED.

BAR STEEL REINFORCEMENT SHALL BE COATED WITH POWERED EPOXY RESIN IN ACCORDANCE WITH SECTION 505 OF THE STANDARD SPECIFICATIONS (LATEST EDITION).

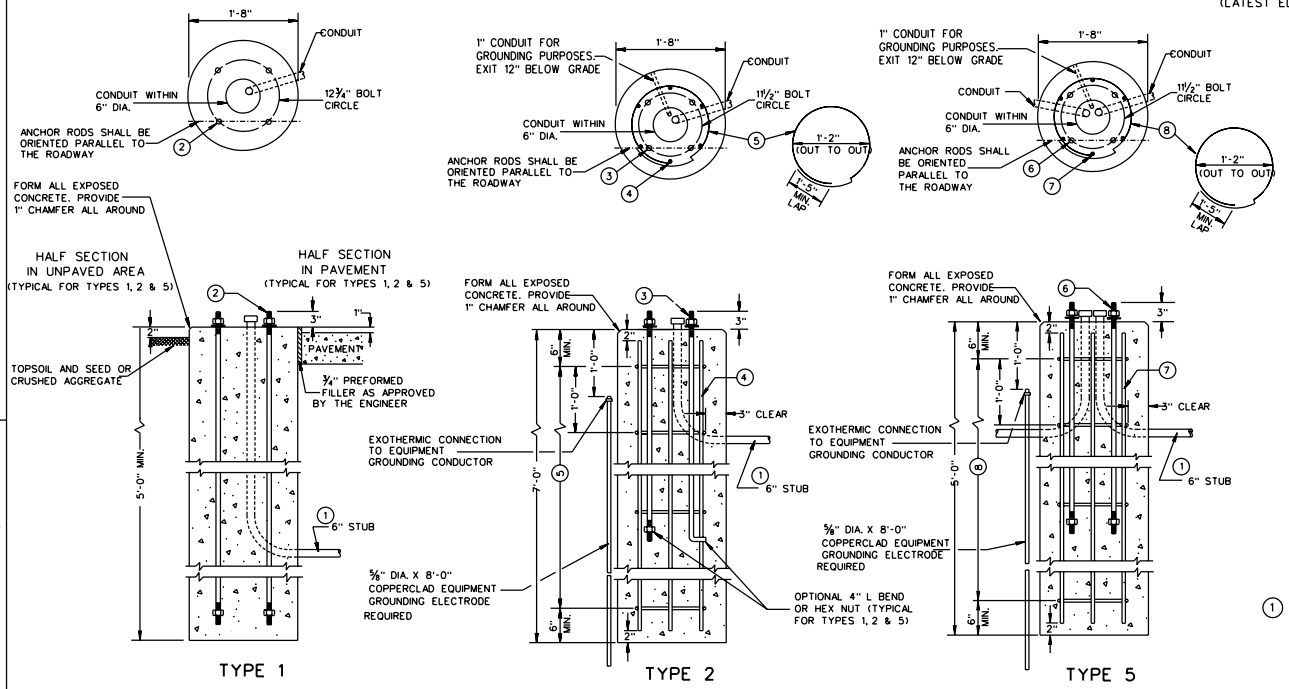

CONCRETE BASES

QUANTITY REQUIREMENTS	CONCRETE BASE TYPE		
	1	2	5
APPROX. CUBIC YARDS OF CONCRETE	0.40	0.57	0.40
LBS. OF HOOP BAR STEEL	NONE	23	16
LBS. OF VERTICAL BAR STEEL	NONE	60	18

1. THE MINIMUM DEPTH OF CONDUIT EXITING THE CONCRETE BASE AND INSTALLED BELOW THE TRAVELED WAY SHALL BE 24 INCHES. THE MINIMUM DEPTH OF CONDUIT EXITING THE CONCRETE BASE THAT IS NOT INSTALLED BELOW THE TRAVELED WAY SHALL BE 18 INCHES. THE MAXIMUM DEPTH OF ALL CONDUIT SHALL BE 36 INCHES EXCEPT WITH WRITTEN APPROVAL BY THE ENGINEER.
2. (4) 1" DIA. X 3'-6" ANCHOR RODS.
3. (4) 1" DIA. X 5'-0" ANCHOR RODS.
4. (6) NO. 6 X 6'-8" BAR STEEL REINFORCEMENT.
5. (7) NO. 4 X 5'-1" BAR STEEL REINFORCEMENT @ 1'-0" C-C.
6. (4) 1" DIA. X 3'-6" ANCHOR RODS.
7. (6) NO.4 X 4'-8" BAR STEEL REINFORCEMENT
8. (5) NO. 4 X 5'-1" BAR STEEL REINFORCEMENT @ 1'-0" C-C.

NO SCALE

City of Manitowoc
ENGINEERING DEPARTMENT

Rev. 4/05

FORM NO. 951

SIGNAL PULL BOX

TABLE OF NOMINAL DIMENSIONS AND WEIGHTS

DIMENSION IN INCHES		TYPE OF PIPE									
		CORRUGATED STEEL									POLYETHYLENE SDR 32.5
PIPE DIAMETER (INSIDE)	A	12	12	12	18	18	18	24	24	24	12
PIPE LENGTH **	B	24	30	36	24	30	36	36	42	48	24
WALL THICKNESS	C	0.064	0.064	0.064	0.064	0.064	0.064	0.064	0.064	0.064	0.4
COVER	D	10 1/4	10 1/4	10 1/4	16 1/4	16 1/4	16 1/4	22 1/4	22 1/4	22 1/4	10 1/4
FRAME	E	14 1/2	14 1/2	14 1/2	20 1/2	20 1/2	20 1/2	26 1/2	26 1/2	26 1/2	14 1/2
FRAME	F	8 1/2	8 1/2	8 1/2	14 1/2	14 1/2	14 1/2	20 1/2	20 1/2	20 1/2	8 1/2
FRAME	G	11 1/2	11 1/2	11 1/2	17 1/2	17 1/2	17 1/2	23 1/2	23 1/2	23 1/2	11 1/2
WEIGHT IN POUNDS *											
FRAME AND COVER		60	60	60	110	110	110	155	155	155	60

* THE ACTUAL WEIGHT OF THE MANHOLE FRAME AND COVER MAY VARY WITHIN 5 PERCENT PLUS OR MINUS OF THE WEIGHTS SHOWN.

** NORMALLY USED LENGTHS. THE PROJECT ENGINEER SHALL DETERMINE IF PIPE LENGTHS, OTHER THAN THOSE SPECIFIED, SHALL BE USED, TO A MAXIMUM OF 48" (CONTINUOUS LENGTH, NON-SPLICED). THE ADDITIONAL LENGTH SHALL BE INCIDENTAL TO THE PULL BOX BID PRICE.

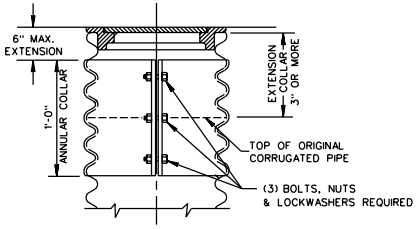

CORRUGATED PIPE EXTENDER

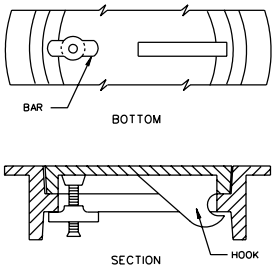

ALTERNATE COVER (LOCKING)

TIGHTENING BAR TYPE

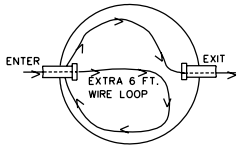

ILLUSTRATION OF WIRE/CABLE PLACEMENT IN PULLBOX

GENERAL NOTES

DETAILS OF CONSTRUCTION, MATERIALS AND WORKMANSHIP NOT SHOWN ON THIS DRAWING SHALL CONFORM TO THE PERTINENT REQUIREMENTS OF THE CONTRACT.

ALL FRAMES AND COVERS SHALL BE HEAVY DUTY TYPE, SUITABLE FOR VEHICULAR TRAFFIC LOADS.

PULL BOXES LOCATED IN THE ROADWAYS SHALL HAVE LOCKING COVERS.

ENTRANCE HOLES INTO PULL BOXES SHALL BE CUT WITH A CIRCULAR HOLE SAW OR HYDRAULIC CONDUIT PUNCH. HOLE SIZE SHALL BE THE OUTSIDE DIAMETER OF THE CONDUIT THAT IS TO FIT IN THE OPENING PLUS NO MORE THAN 1/4".

THE CONTRACTOR SHALL NOT INSTALL WIRE IN ANY PULL BOX UNTIL ITS INSTALLATION HAS BEEN INSPECTED AND ACCEPTED BY THE ENGINEER.

GROUNDING LUGS (MECHANICAL CONNECTORS) SHALL BE U.L. LISTED AND APPROVED FOR USE WITH COPPER WIRE. THE MECHANICAL CONNECTION (INSIDE AND OUTSIDE) TO THE PULL BOX, SHALL BE TOTALLY AND PERMANENTLY SEALED WITH A SILICONE OR RUBBERIZED CAULKING COMPOUND AS APPROVED BY THE ENGINEER.

GROUNDING LUGS ARE NOT REQUIRED IN PULL BOXES WHEN VOLTAGES OF LESS THAN 50 VOLTS AC ARE THE ONLY VOLTAGES ENCOUNTERED IN THE BOXES.

DRAIN DUCT SHALL BE MEASURED AND PAID FOR SEPARATELY.

RODENT WIRE SCREEN SHALL BE 1/8" STAINLESS STEEL MESH AND BE INSTALLED WITH A STAINLESS STEEL HOSE CLAMP OF SUFFICIENT SIZE.

ALL METALLIC CONDUIT IN WHICH WIRE AND/OR CABLE IS TO BE INSTALLED, SHALL BE BUSHED BEFORE INSTALLATION OF THE WIRE AND/OR CABLE.

S.D.D. 9B2, "CONDUIT", APPLIES TO THIS DRAWING.

WHEN PULL BOXES ARE INSTALLED FOR FUTURE USE, DO NOT INSTALL THE EQUIPMENT GROUNDING LUG. THE EQUIPMENT GROUNDING LUG, THE EQUIPMENT GROUNDING ELECTRODE AND THE EQUIPMENT GROUNDING CONDUCTOR SHALL BE REQUIRED AND INSTALLED UNDER A FUTURE WIRING CONTRACT.

IF PULL BOX EQUIPMENT GROUNDING IS REQUIRED USING AN EQUIPMENT GROUNDING ELECTRODE IN EACH PULL BOX, THE EQUIPMENT GROUNDING ELECTRODE SHALL BE 5/8" X 8'-0", COPPERCLAD AND BE EXOTHERMICALLY WELDED TO A #4 AWG, COPPER, STRANDED WIRE (BARE OR GREEN INSULATED). THE #4 AWG WIRE SHALL BE 4 FEET IN LENGTH, NEATLY COILED, TAPED AND AVAILABLE FOR USE WHEN REQUIRED.

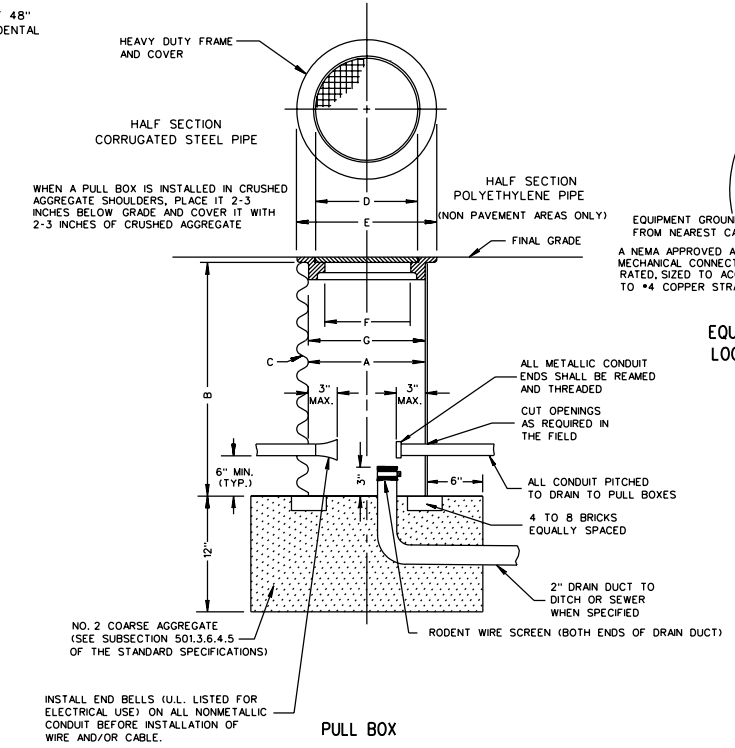

PULL BOX

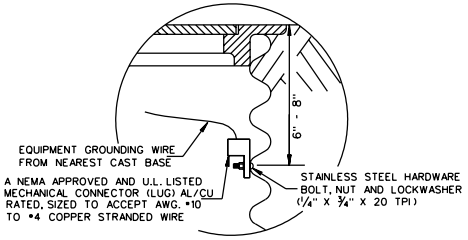

EQUIPMENT GROUNDING LUG AND LOCATION IN STEEL PULL BOXES

NO SCALE

City of Manitowoc
ENGINEERING DEPARTMENT

FORM NO. 952

Rev. 4/05

SIGNAL CONDUIT DETAIL

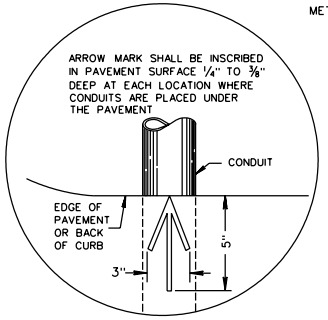

PLAN VIEW
ARROW MARK

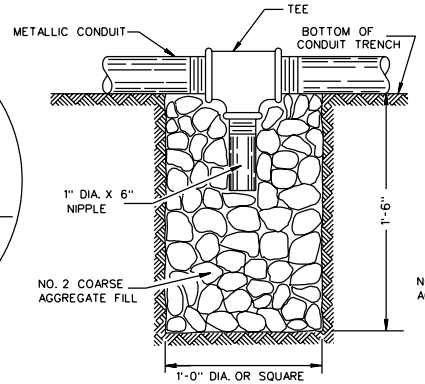

NOTE: INSTALL AT LOCATIONS WHERE METALLIC CONDUITS CANNOT BE PITCHED TO DRAIN INTO A PULL BOX.

DRAIN SUMP FOR METALLIC CONDUIT

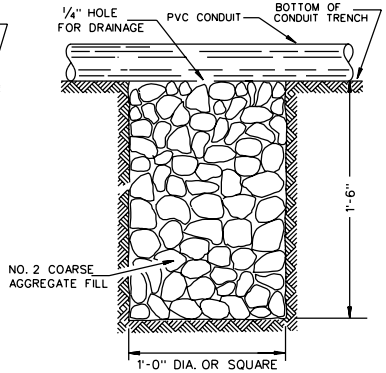

NOTE:
INSTALL AT LOCATIONS WHERE PVC CONDUITS CANNOT BE PITCHED TO DRAIN INTO A PULL BOX.

DRAIN SUMP FOR PVC CONDUIT

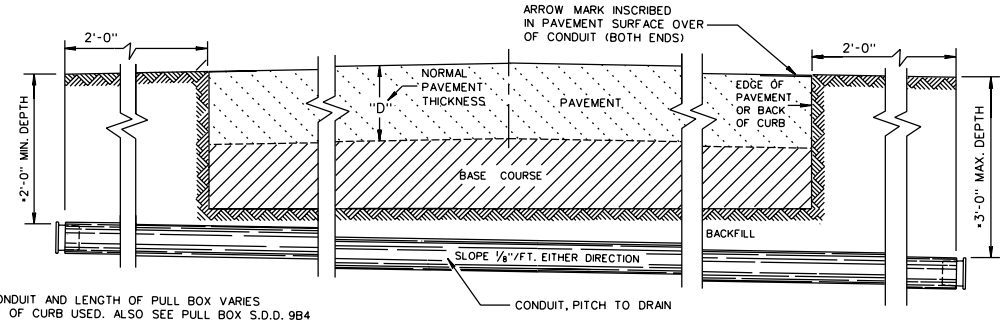

*DEPTH OF CONDUIT AND LENGTH OF PULL BOX VARIES WITH HEIGHT OF CURB USED. ALSO SEE PULL BOX S.D.D. 9B4

SIDE ELEVATION
DETAIL FOR CONDUIT UNDER PAVED HIGHWAYS

GENERAL NOTES

DETAILS OF CONSTRUCTION, MATERIALS AND WORKMANSHIP NOT SHOWN ON THIS DRAWING SHALL CONFORM TO THE PERTINENT REQUIREMENTS OF THE CONTRACT.

METALLIC (STANDARD SPECIFICATION 652.2.2) OR NONMETALLIC (STANDARD SPECIFICATION 652.2.3) CONDUIT SHALL BE FURNISHED AND PLACED AS SHOWN.

DEPTH OF CONDUIT INSTALLED BELOW THE TRAVELED WAY SHALL BE 24 INCHES MINIMUM AND 36 INCHES MAXIMUM.

DEPTH OF CONDUIT INSTALLED THAT IS NOT BELOW THE TRAVELED WAY SHALL BE 18 INCHES MINIMUM AND 36 INCHES MAXIMUM.

ANY EXCEPTION TO THE MAXIMUM DEPTH SHALL BE ONLY WITH THE WRITTEN APPROVAL OF THE ENGINEER.

THE TRENCH SHALL NOT BE BACKFILLED PRIOR TO INSPECTION OF THE CONDUIT.

ALL METALLIC CONDUIT RACEWAY ENDS SHALL BE REAMED AND THREADED.

ALL METALLIC CONDUIT IN WHICH WIRE OR CABLE IS TO BE INSTALLED SHALL BE BUSHED WITH APPROVED THREADED BUSHINGS BEFORE INSTALLATION OF THE WIRE OR CABLE.

ALL METALLIC CONDUITS IN WHICH WIRE OR CABLE IS NOT TO BE INSTALLED SHALL BE CAPPED WITH THREADED PROTECTIVE CAPS, AS APPROVED BY THE ENGINEER.

ALL NONMETALLIC CONDUIT SHALL BE CAPPED OR PLUGGED IMMEDIATELY AFTER INSTALLATION AND SHALL REMAIN CAPPED OR PLUGGED UNTIL WIRE/CABLES ARE INSTALLED.

NONMETALLIC CONDUITS IN WHICH WIRE OR CABLE IS NOT BEING INSTALLED SHALL REMAIN CAPPED OR PLUGGED.

BENDING OF PVC ELECTRICAL CONDUIT SHALL BE ACCOMPLISHED BY USING A BLANKET OR EMERSION TYPE TANK DESIGNED FOR THE PURPOSE OF BENDING PVC ELECTRICAL CONDUIT.

ALL CUT ENDS SHALL BE TRIMMED INSIDE AND OUTSIDE TO REMOVE ALL ROUGH EDGES ON NONMETALLIC CONDUIT. (SEE NEC 347.5)

WHEN REQUIRED TO CONNECT NONMETALLIC CONDUIT TO METALLIC CONDUIT, ONLY U.L. LISTED ADAPTER FITTINGS SHALL BE USED.

PRIOR TO CONDUIT ACCEPTANCE, CONDUIT CAPS OR PLUGS SHALL BE REMOVED, AND THE CAPS, PLUGS AND CONDUIT ENDS SHALL BE THOROUGHLY CLEANED AND THEN THE CAPS OR PLUGS REINSTALLED TO ENSURE THAT THE CAPS OR PLUGS CAN BE EASILY REMOVED IN THE FUTURE.

ALL CONDUIT BEING FURNISHED AND INSTALLED SHALL HAVE THE U.L. LABEL FIRMLY ATTACHED.

CONDUIT RUNS SHALL BE THE SAME SIZE OF CONDUIT FROM ONE END TO THE OTHER (FROM PULL BOX TO PULL BOX-OR-JUNCTION BOX TO JUNCTION BOX-OR-BASE TO BASE, ETC.).

POLY ROPE OR A PULL WIRE SHALL BE INSTALLED AS STATED IN THE STANDARD SPECIFICATION, ITEM 652.3.1.1.

ALL CONDUIT RUNS SHALL BE STRAIGHT (WITHOUT BENDS) FROM PULL BOX TO PULL BOX, PULL BOX TO BASE AND BASE TO BASE AS SHOWN ON THE PLANS UNLESS OTHERWISE APPROVED BY THE PROJECT ENGINEER.

NO SCALE

City of Manitowoc
ENGINEERING DEPARTMENT

FORM NO.
953

Rev. 4/05

SIGNAL LOOP DETECTOR PLACED IN C.A.B.C UNDER NEW CONCRETE PAVEMENT

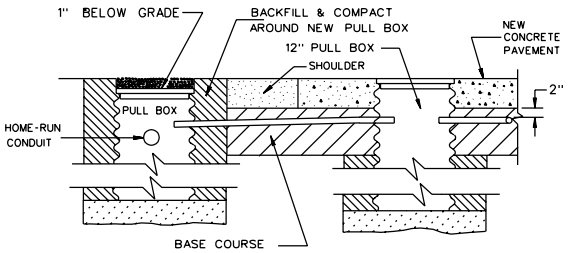

SECTION A-A
NO CURB & GUTTER

LOOP DETECTOR INSTALLATION DETAILS

•RECESS PULL BOX SO THAT THE COVER IS 3" BELOW GRADE IN SHOULDER AREAS OF CRUSHED AGGREGATE. BACKFILL OVER COVER WITH THE CRUSHED AGGREGATE TO BRING THE AREA TO GRADE LEVEL.

GENERAL NOTES

DETAILS OF CONSTRUCTION, MATERIALS AND WORKMANSHIP NOT SHOWN ON THIS DRAWING SHALL CONFORM TO THE PERTINENT REQUIREMENTS OF THE CONTRACT.

LOOP SIZE, LOCATION, NUMBER OF TURNS OF WIRE AND ASSOCIATED SIGNAL PHASE SHALL BE AS SHOWN ON THE PLANS.

PITCH LEAD OUT CONDUIT TO DRAIN TO ROADSIDE PULL BOX.

SPLICES SHALL BE INSTALLED BY USING CAST IN PLACE SPLICE KITS SUCH AS 3M TYPE 82A1 OR APPROVED EQUAL. NON-INSULATED BUTT SPLICES TO FIT •12 AWG STRANDED WIRE SHALL BE USED, SPLICES SHALL BE SOLDERED AND INSULATED FROM EACH OTHER AS PER INSTRUCTIONS INCLUDED IN THE SPLICE KIT.

THE GROUND RESISTANCE READING OF THE LOOP SHALL READ "INFININTY" TO GROUND ON AN OHMMETER USING A MULTIPLIER SCALE OF 1 MEGOHM AND AN INPUT RESISTANCE OF 11 MEGOHMS MINIMUM BEFORE SPLICING THE LOOP TO THE LEAD-IN CABLE.

AFTER SPLICING THE LOOP WIRE TO THE LOOP LEAD-IN CABLE, THE CONTRACTOR SHALL MEASURE INDUCTANCE, GROUND RESISTANCE AND WIRE RESISTANCE AT THE CABINET END OF THE LEAD-IN CABLE AND FURNISH A COPY OF THE READINGS TO THE PROJECT ENGINEER FOR EVALUATION.

ANTI-SIEZE LUBRICATING MATERIAL SHALL BE USED ON ALL THREADS OF THREADED ASSEMBLIES BEFORE INSTALLATION.

LOOP DETECTOR LEADS SHALL BE IDENTIFIED WITH THEIR ASSOCIATED LOOP BY USE OF WATERPROOF TAGS AT BOTH ENDS OF THE CABLE. A LISTING OF THE CABLE IDENTIFICATION PER INDIVIDUAL LOOP LEAD-IN SHALL BE PLACED IN THE CABINET.

THE •12 AWG LOOP WIRE FROM THE LOOP TO THE ROADSIDE PULL BOX, SHALL BE HAND TWISTED AT LEAST 3 TWISTS PER FOOT BEFORE INSTALLATION.

SPLICES OF LOOP WIRE TO LEAD-IN CABLE SHALL BE MADE ONLY IN PULL BOXES AT THE SIDE OF THE ROAD.

THE •12 AWG LOOP WIRE SHALL BE INSTALLED FROM THE ROADSIDE PULL BOX, THROUGH THE LOOP DUCT, BACK TO THE ROADSIDE PULL BOX, AND BE INSTALLED IN ONE, NON-SPLICED, CONTINUOUS LENGTH.

PROTECTION OF THE CONDUIT, CONDULET AND PULL BOX SHALL BE REQUIRED AFTER INSTALLATION AND BEFORE THE NEW CONCRETE PAVEMENT IS PLACED.

12" PULL BOXES IN PAVEMENT SHALL BE CORRUGATED STEEL ONLY.

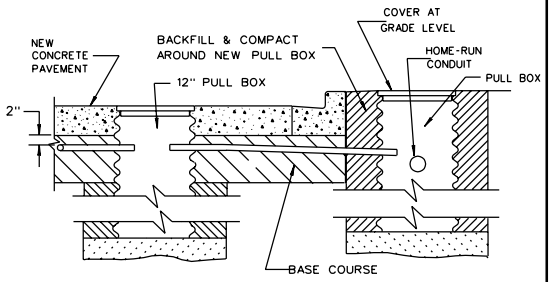

SECTION B-B
CURB & GUTTER

LOOP DETECTOR INSTALLATION DETAILS

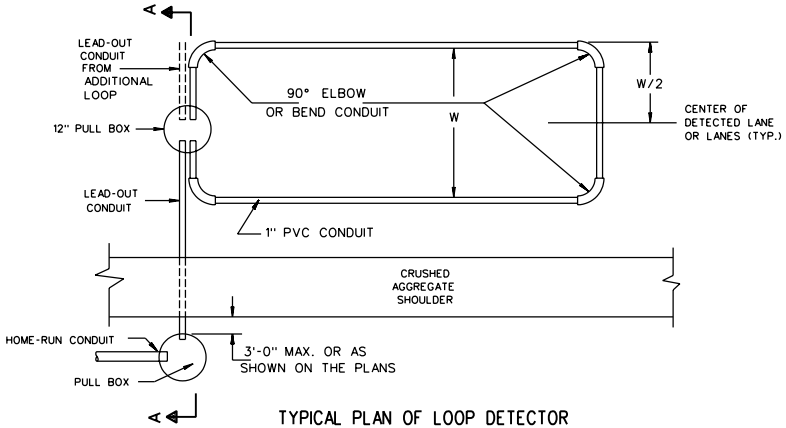

TYPICAL PLAN OF LOOP DETECTOR
WITH 12" PULLBOX

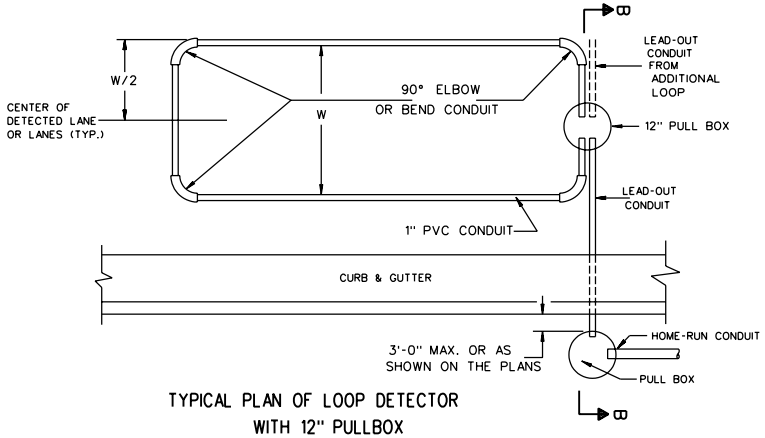

TYPICAL PLAN OF LOOP DETECTOR
WITH 12" PULLBOX

NO SCALE

City of Manitowoc
ENGINEERING DEPARTMENT

Rev. 4/05

FORM NO.
954

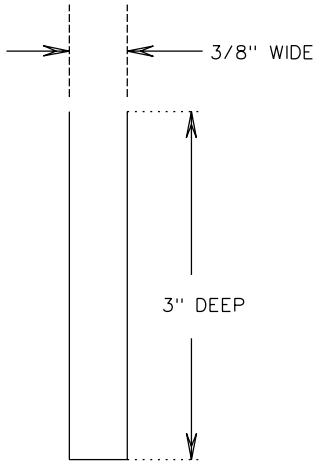

LOOP SAW CUT (TYP)

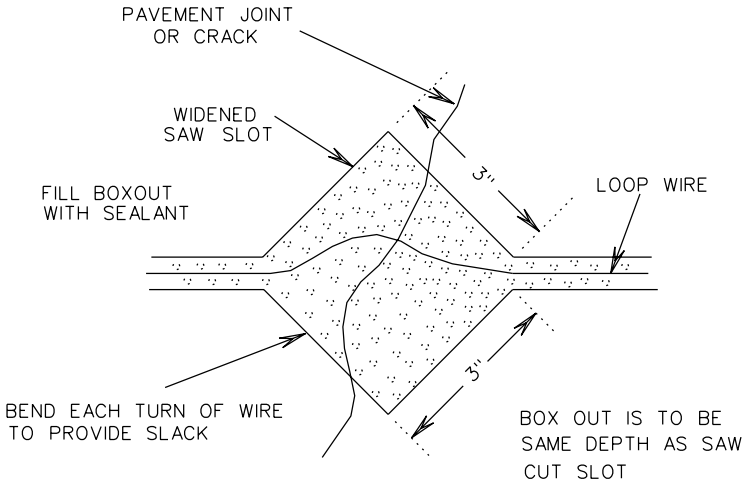

DETAIL OF SAW CUT FOR LOOP AT
PAVEMENT JOINT AND/OR CRACKS

DETAIL

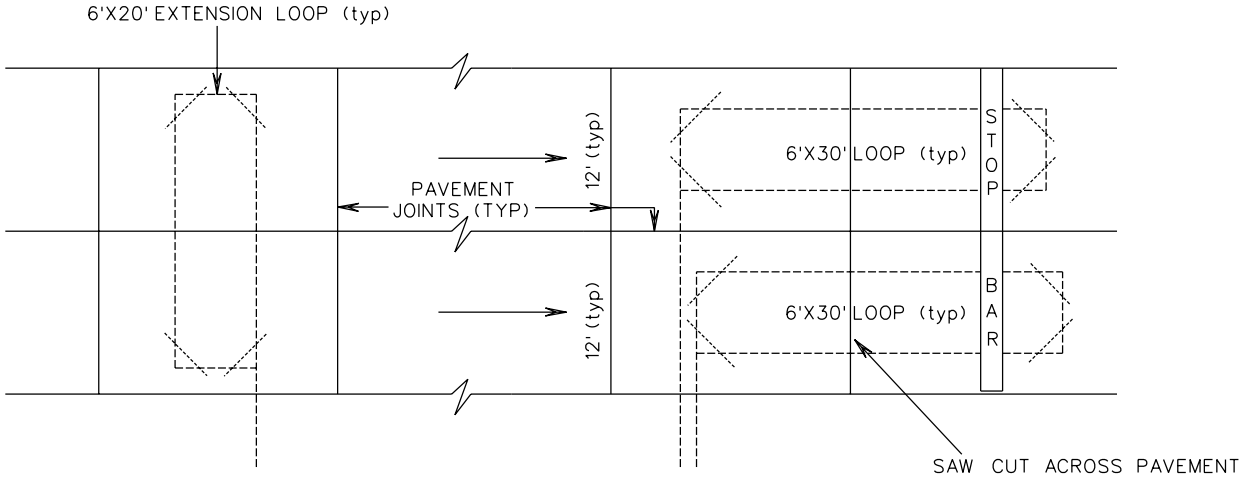

PLAN VIEW

---------- LOOP DETECTOR SAW GROOVES 3/8" WIDE X 3" DEEP

[ ] 6' WIDE BY REQUIRED LENGTH (SEE PLAN)

EXACT LOCATIONS TO BE DETERMINED BY THE FIELD ENGINEER.

NO SCALE

SIGNAL LOOP DETECTOR SAWED IN EXISTING PAVEMENT

City of Manitowoc
ENGINEERING DEPARTMENT

Rev. 4/05

FORM NO.
955

SIGNAL CONCRETE CONTROL CABINET BASES

CONTROL CABINET BASE TYPE	DIMENSIONS				C.Y. CONCRETE (APPROX.)
	H	I	J	K	
TYPE 6 - 30" CABINET	34"	60"	10"	17"	.64
TYPE 7 - 38" CABINET	42"	60"	10"	21"	.93
TYPE 8 - 38" CABINET	42"	72"	12"	21"	1.29
TYPE 9 - VARIABLE	54"	72"	14"	27"	1.56
TYPE 10 - POST MOUNT	AS SHOWN				.32

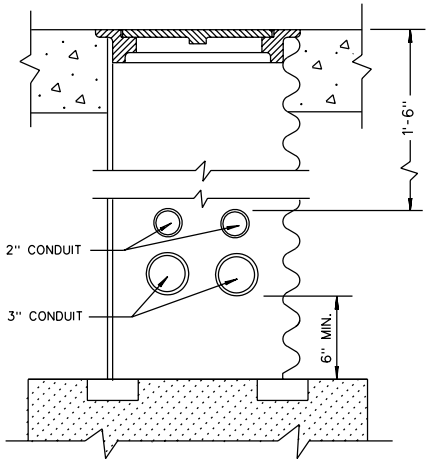

CONDUIT LOCATIONS IN 24" X 36" PULL BOX
(LEADING TO CONTROLLER CABINET BASE TYPE 6, 7, 8 AND 9)

GENERAL NOTES

DETAILS OF CONSTRUCTION, MATERIALS AND WORKMANSHIP NOT SHOWN ON THIS DRAWING SHALL CONFORM TO THE PERTINENT REQUIREMENTS OF THE CONTRACT.

INSTALL FOUR ½ INCH MINIMUM DIAMETER X 4 INCH MINIMUM LENGTH APPROVED CONCRETE MASONRY ANCHORS TO ANCHOR THE CABINET TO TYPE 6, 7, 8, AND 9 BASES. THE ANCHOR STUDS SHALL BE LOCATED AS DIRECTED BY THE ENGINEER TO PROPERLY ANCHOR THE CONTROL CABINET TO THE BASE.

WHEN REQUIRED TO CONNECT NONMETALLIC CONDUIT TO METALLIC CONDUIT, ONLY ADAPTER FITTINGS, U.L. LISTED FOR ELECTRICAL USE, SHALL BE USED.

CONDUIT HEIGHT ABOVE THE CONCRETE BASE SHALL BE 1 INCH.

DEPTH OF CONDUIT INSTALLED BELOW THE TRAVELED WAY SHALL BE 24 INCHES MINIMUM AND 36 INCHES MAXIMUM.

DEPTH OF CONDUIT INSTALLED THAT IS NOT BELOW THE TRAVELED WAY SHALL BE 18 INCHES MINIMUM AND 36 INCHES MAXIMUM.

ANY EXCEPTION TO THE MAXIMUM DEPTH SHALL BE ONLY WITH THE WRITTEN APPROVAL OF THE ENGINEER.

CONTROL CABINET BASE TOP SURFACES SHALL BE TROWEL FINISHED AND LEVEL.

WHEN A TYPE 10 CONTROL CABINET BASE IS USED TO POST MOUNT A CONTROL CABINET, A 36" SQUARE 4" THICK CONCRETE MAINTENANCE PLATFORM SHALL BE REQUIRED ON THE DOOR SIDE OF THE CABINET. THE TOP 1 INCH SHALL BE ABOVE FINISHED GRADE AND BE BROOM FINISHED AND LEVEL.

MAINTENANCE PLATFORMS ARE NOT REQUIRED WHEN THE SURROUNDING AREA IS PAVED.

MINIMUM BENDING RADIUS OF CONDUIT - 6 X THE DIAMETER.

ALL METALLIC CONDUIT ENDS SHALL BE REAMED AND THREADED.

ALL CONDUIT ENDS AT THE TOP OF CONCRETE BASES SHALL BE CAPPED IF METALLIC OR PLUGGED IF NONMETALLIC IMMEDIATELY AFTER PLACEMENT AND BEFORE CONCRETE IS POURED. CONDUITS IN WHICH WIRE OR CABLE IS NOT BEING INSTALLED SHALL REMAIN CAPPED OR PLUGGED.

ALL FOUR (TWO INCH AND THREE INCH) CONDUIT SHALL BE INSTALLED FROM THE CABINET BASE TO THE FIRST (NEAREST PULL BOX LOCATED AS SHOWN ON THE PLANS.

BELL ENDS SHALL BE INSTALLED ON ALL PVC CONDUIT EXPOSED AT THE TOP OF THE CONCRETE BASE BEFORE INSTALLATION OF CABLE OR WIRE.

CONCRETE FORM DEPTH BELOW FINISHED GRADE SHALL BE 6" MAXIMUM. CONCRETE FORMS SHALL BE REMOVED AFTER CONCRETE HAS SET.

WHEN ANCHOR RODS USING THE ALTERNATE L BEND ARE FURNISHED FOR THE TYPE 10 BASE, THE 4" L BEND SHALL BE IN ADDITION TO THE SPECIFIED ANCHOR ROD BAR LENGTH.

THE "L" BEND SHALL NOT BE THREADED.

STRAIGHT ANCHOR RODS SHALL BE THREADED 12" IN LENGTH ON EACH END OF THE ROD.

(1) FOUR (4) ANCHOR RODS, 1" DIA. X 3'-6"
ANCHOR RODS SHALL BE MANUFACTURED IN ACCORDANCE WITH SECTION 654.2.1 AND 641.2.2 OF THE STANDARD SPECIFICATIONS AND IN ACCORDANCE WITH A-449, OR ASTM. A-687 (GRADE 105).

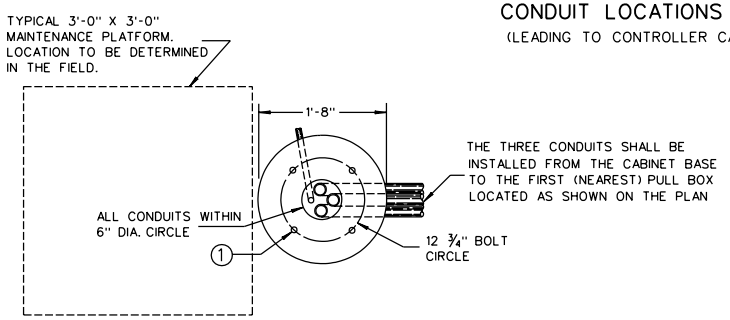

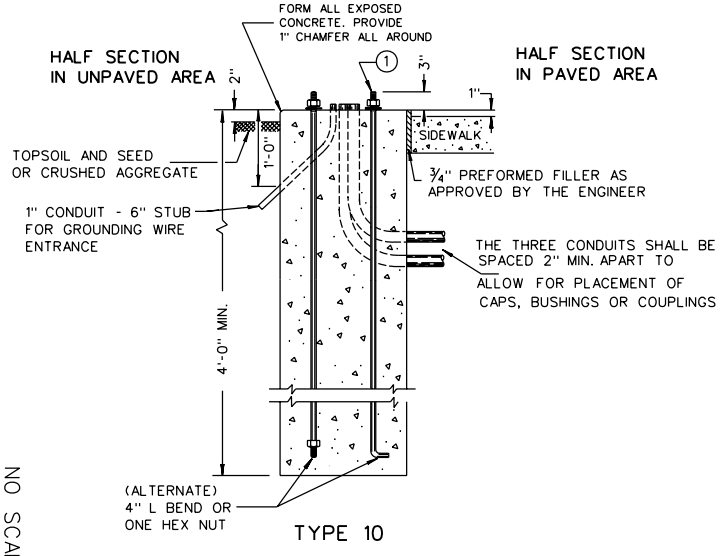

TYPE 10

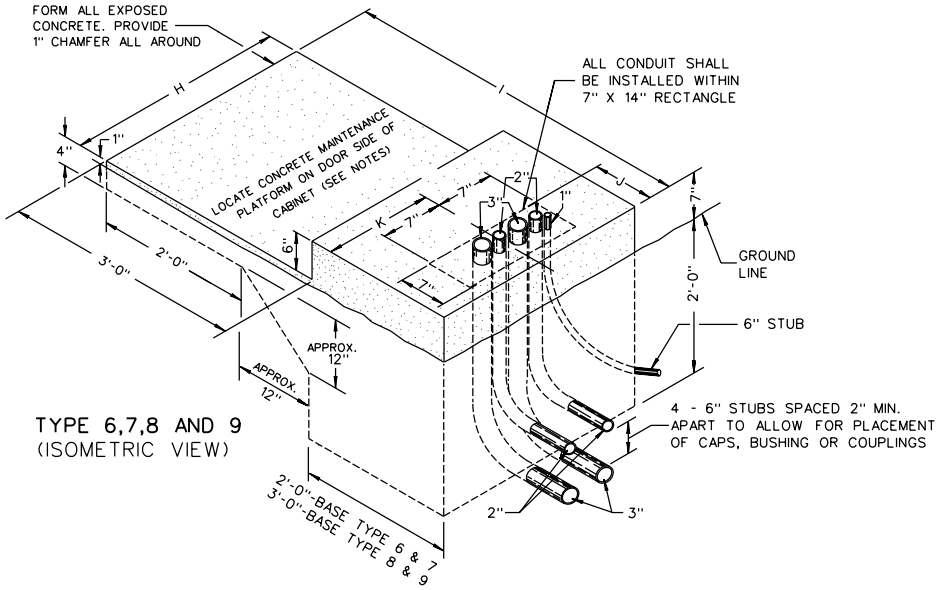

TYPE 6,7,8 AND 9
(ISOMETRIC VIEW)

NO SCALE

City of Manitowoc
ENGINEERING DEPARTMENT

Rev. 4/05

FORM NO.
956

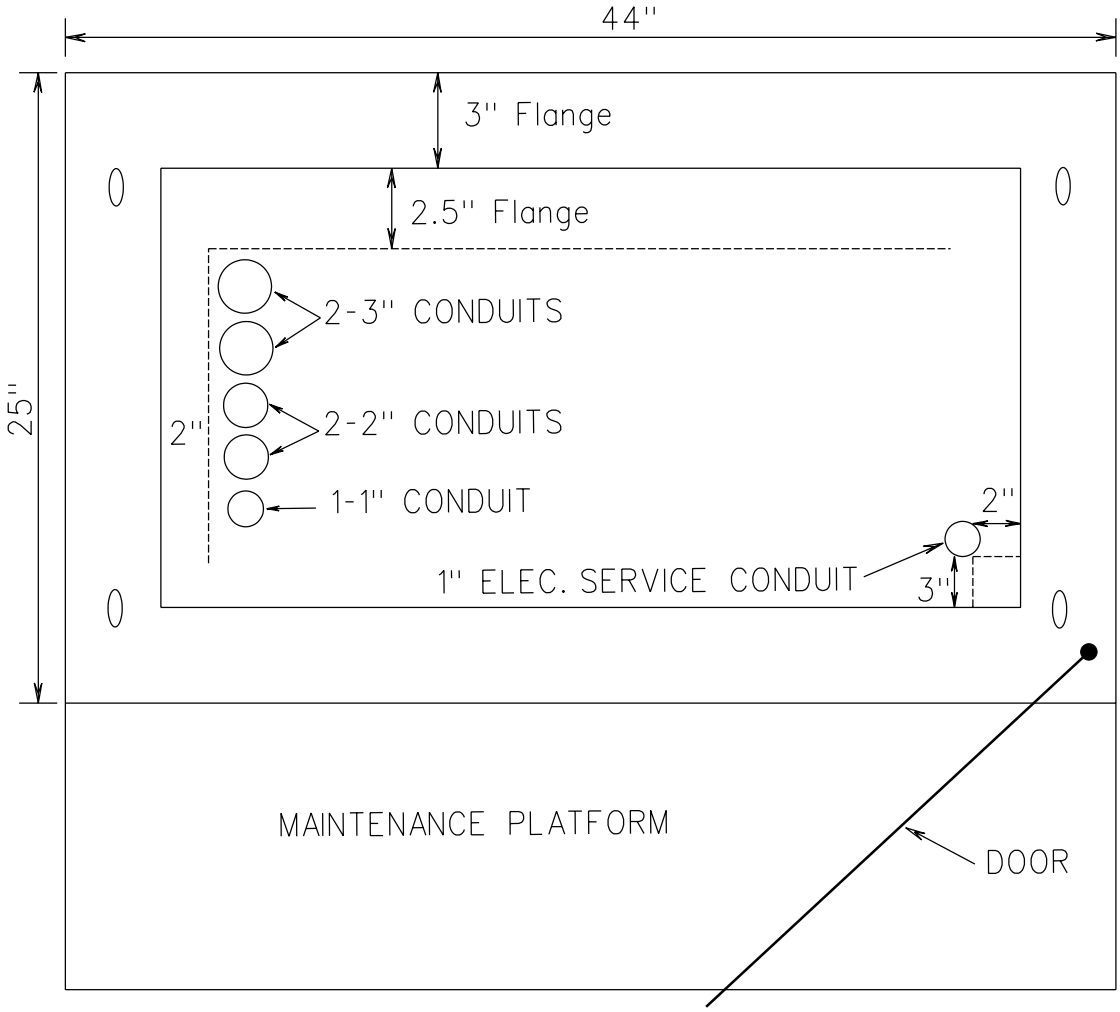

NO SCALE

SIGNAL CONDUIT LOCATION INSIDE OF CONTROL CABINET

City of Manitowoc
ENGINEERING DEPARTMENT

Rev. 4/05

FORM NO.
957

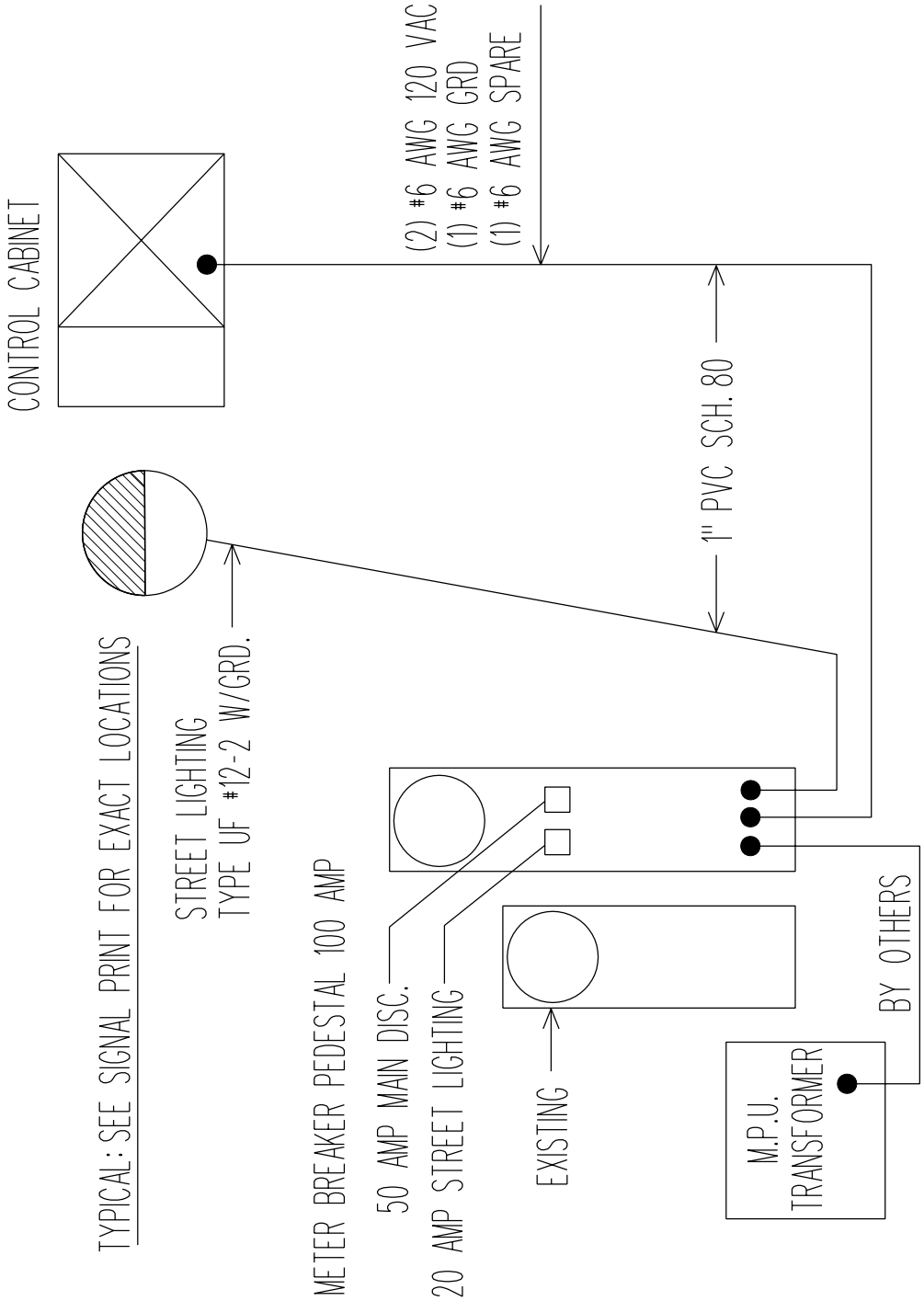

NO SCALE

UNDERGROUNG ELEC. SERVICE
TO SIGNAL CONTROL CABINET

City of Manitowoc
ENGINEERING DEPARTMENT

Rev. 4/05

FORM NO.
958

ELECTRICAL SERVICE

FROM POWER POLE TO CONTROL CABINET

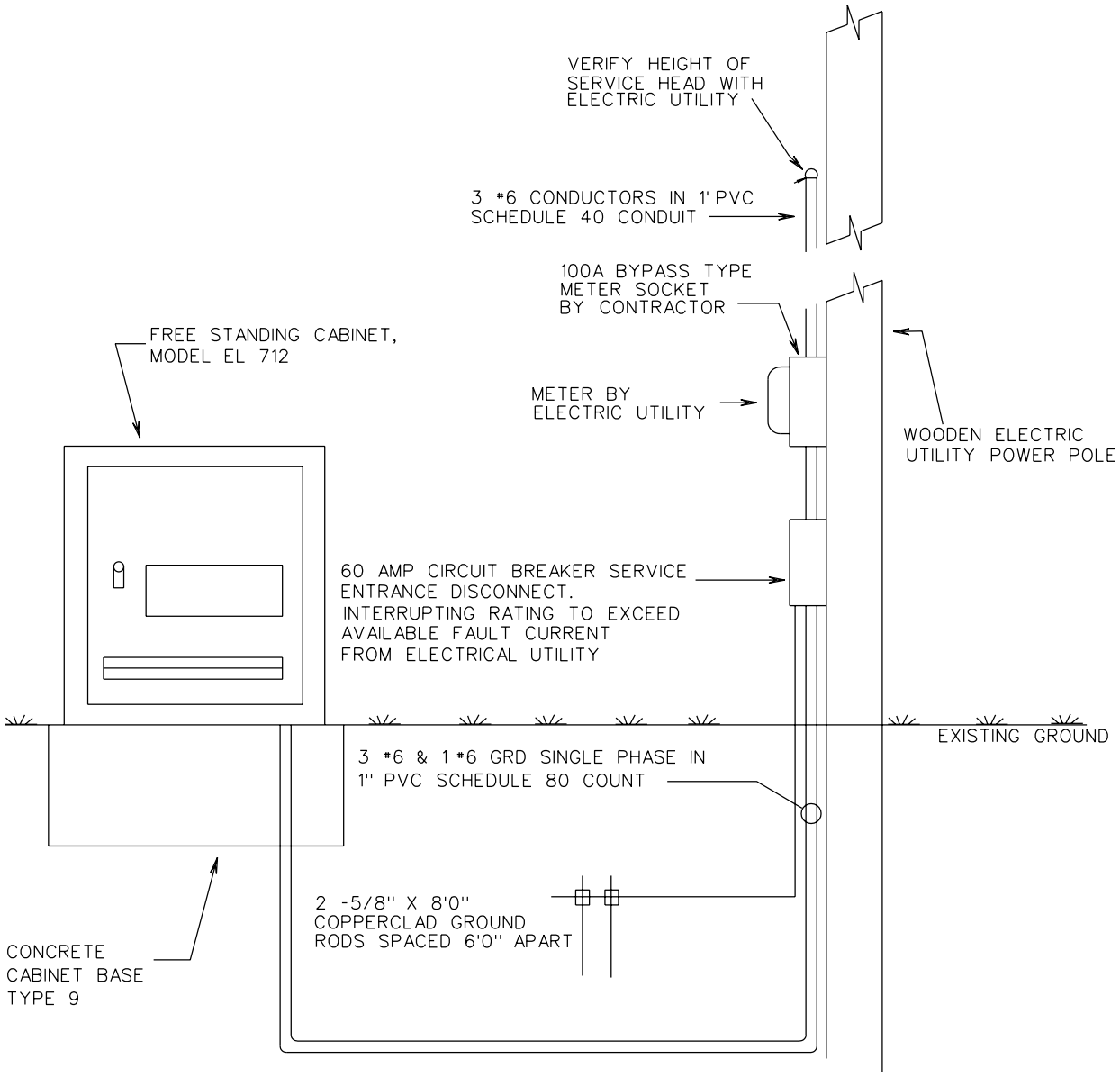

NO SCALE

ELECTRICAL SERVICE TO SIGNAL CONTROL CABINET (FROM A POWER POLE)	City of Manitowoc ENGINEERING DEPARTMENT	
	Rev. 4/05	FORM NO. 959