Chapter SPS 323

HEATING, VENTILATING AND AIR CONDITIONING

Subchapter I — Scope
SPS 323.01 Scope.

Subchapter II — Design
SPS 323.02 Design.

Subchapter III — Heating Equipment
SPS 323.03 Selection of equipment.
SPS 323.04 Types and location of equipment.
SPS 323.045 Solid−fuel−burning appliances.
SPS 323.05 Safety controls.
SPS 323.06 Combustion air.
SPS 323.062 Mechanical draft systems.
SPS 323.065 Equipment maintenance information.

Subchapter IV — Delivery Systems
SPS 323.07 Air distribution systems.
SPS 323.08 Ductwork.
SPS 323.09 Dampers, registers and grilles.
SPS 323.10 Piping.

Subchapter V — Chimneys and Vents
SPS 323.11 General requirements.
SPS 323.12 Masonry chimneys.
SPS 323.13 Factory−built chimneys or vents.
SPS 323.14 Gas vents.
SPS 323.15 Chimney connectors, smoke pipes and stovepipes.
SPS 323.155 Multiple appliance venting.
SPS 323.156 Condensate drains.

Subchapter VI — Fuel Supply Systems
SPS 323.16 Fuel storage.

Subchapter VII — Equipment Location and Operation
SPS 323.17 Equipment location.
SPS 323.18 Operation.

Note: Chapter Ind 23 was renumbered to be chapter ILHR 23, Register, February, 1985, No. 350, eff. 3−1−85. Chapter ILHR 23 was renumbered Chapter Comm 23 under s. 13.93 (2m) (b) 1., Stats., and corrections made under s. 13.93 (2m) (b) 7., Stats., Register, January, 1999, No. 517. Chapter Comm 23 was renumbered chapter SPS 323 under s. 13.92 (4) (b) 1., Stats., Register December 2011 No. 672.

Subchapter I — Scope

SPS 323.01 Scope. The provisions of this chapter shall apply to the design, installation and construction of all heating, ventilating and air conditioning systems in dwellings covered by this code.

History: Cr. Register, November, 1979, No. 287, eff. 6−1−80.

Subchapter II — Design

SPS 323.02 Design. Every dwelling shall be equipped with a heating system designed in accordance with this section. Heating equipment requirements may be waived for recreational dwellings used only during the non−heating season. Where a cooling system is provided, the cooling requirements of this section shall be met.

(1) HEATING AND COOLING SYSTEM DESIGN. (a) The heating and cooling systems shall be designed to maintain the indoor design temperature at outdoor design conditions.

(b) When requested, room−by−room heat loss and heat gain calculations shall be furnished.

Note: See Appendix for outdoor design temperature map.

(2) DISTRIBUTION SYSTEMS. Distribution systems shall be sized and located to satisfy the heating and cooling loads of each conditioned space. When requested, a layout of the distribution system shall be furnished to show that the system meets the requirements of this code.

(3) VENTILATION. (a) *General.* 1. All exhaust vents shall terminate outside the structure.

2. Automatic or gravity dampers that close when the system is not operating shall be provided for outdoor air intake and exhaust.

(b) *Balancing.* 1. General. Except as provided under subd. 2., mechanical ventilation systems shall be balanced.

2. Exception. Passive intake air ducts providing makeup air for intermittent exhaust fans shall be sized to provide at least 40% of the total air that would be exhausted with all intermittent exhaust ventilation in the dwelling operating simultaneously.

3. Kitchen range hoods. a. Kitchen range hoods that exhaust air from the kitchen area are considered as exhaust ventilation for balancing and makeup purposes.

b. Kitchen range hoods that are listed and installed to recirculate air without exhausting it are not required to be balanced.

4. Infiltration. a. Infiltration may be considered as makeup air for balancing purposes only where there are no naturally vented space− or water−heating appliances in the dwelling.

b. For the purpose of complying with this subdivision, naturally vented space− or water−heating appliances are those that take combustion or dilution air from inside the dwelling, including unsealed fireplaces and draft hood appliances with power venting.

Note: Whole−house fans that are used in the summer to bring cool night air in through open windows and exhaust into the attic are considered to be a supplemental cooling system rather than part of the ventilation system.

Note: See s. SPS 322.39 (5) for additional requirements on mechanical ventilation.

(c) *Habitable rooms.* Habitable rooms without openable windows shall be provided with a balanced mechanical ventilation system producing one air change per hour of fresh outside air while the room is occupied.

(d) *Rooms with toilets, tubs or showers.* 1. Except as provided under subd. 2., any room with a toilet, tub or shower shall be provided with exhaust ventilation capable of exhausting 50 cubic feet per minute on an intermittent basis or 20 cubic feet on a continuous basis.

2. For dwellings with no electrical service, any room with a toilet, tub or shower shall be provided with an openable window.

Note: The department will accept designs which meet the Air Conditioning Contractors of America manual; the Mechanical Contractors Association manual; and the Sheet Metal and Air Conditioning Contractors National Association standards for heating and air conditioning systems for one− and 2−family dwellings.

(4) CONTROLS. The temperature rise through the equipment shall not exceed 100° F unless listed. Controls shall be provided to maintain the inside temperature. Where forced, warm−air systems are used, controls shall be installed to control air movement.

History: Cr. Register, November, 1979, No. 287, eff. 6−1−80; am. (1) Register, January, 1989, No. 397, eff. 2−1−89; am. (3), Register, March, 1992, No. 435, eff. 4−1−92; r. and recr. (3), Register, November, 1995, No. 479, eff. 12−1−95; r. and recr. (1) and (3) (a), Register, January, 1999, No. 517, eff. 2−1−99; r. and recr. (3) (a), renum. (3) (b) and (c) to be (3) (c) and (d), and cr. (3) (b), Register, March, 2001, No. 543, eff. 4−1−01; CR 08−043: r. (1) (a), renum. (1) (b), (c) and (3) (a) to be (1) (a), (b) and (3) (a) 1., cr. (3) (a) 2., am. (3) (d) Register March 2009 No. 639, eff. 4−1−09.

Subchapter III — Heating Equipment

SPS 323.03 Selection of equipment. All heating and central cooling equipment shall be selected on the basis of air−handling capacity, pumping capacity, and thermal capacity to handle the calculated design heating or cooling load.

History: Cr. Register, November, 1979, No. 287, eff. 6−1−80.

SPS 323.04 Types and location of equipment. (1) GENERAL. (a) All heat producing appliances and cooling appliances shall be listed by a testing agency acceptable to the department.

(b) Installation and maintenance of gas−fueled appliances shall comply with the appliance listing and the requirements of NFPA 54, National Fuel Gas Code, except as otherwise required under this chapter.

(c) The clearances from combustible materials in Tables 323.04−A and 323.04−B shall apply unless otherwise shown on listed appliances.

TABLE 323.04−A
STANDARD INSTALLATION CLEARANCES (INCHES) FOR HEAT−PRODUCING APPLIANCES

		Appliance[1]				
Residential Type Appliances for Installation in Rooms Which are Large (See Note 2)		**Above Top of Casing or Appliance**	**From Top and Sides of Warm−Air Bonnet or Plenum**	**From Front See Note 3**	**From Back**	**From Sides**
Boilers and Water Heaters	Automatic Oil					
Steam Boilers − 15 psi	or	6	—	24	6	6
Water Boilers − 250° F	Comb. Gas−Oil					
Water Heaters − 200° F	Automatic Gas	6	—	18	6	6
All Water Walls or Jacketed	Electric	6	—	18	6	6
Furnaces − Central	Automatic Oil					
Gravity, Upflow, Downflow,	or	6[4]	6	24	6	6
Horizontal and Duct,	Comb. Gas−Oil					
Warm−Air − 250° F	Automatic Gas	6[4]	6	18	6	6
	Electric	6[4]	6	18	6	6
Furnaces − Floor	Automatic Oil					
For Mounting in Combustible Floors	or	36	—	12	12	12
	Comb. Gas−Oil					
	Automatic Gas	36	—	12	12	12
	Electric	36	—	12	12	12
Heat Exchanger						
Steam − 15 psi Max.						
Hot Water − 250° F Max.	—	1	1	1	1	1
Room Heaters						
Circulating Type	Oil	36	—	24	12	12
Vented or Unvented	Gas	36	—	24	12	12
Radiant or Other Type	Oil	36	—	36	36	36
Vented or Unvented	Gas	36	—	36	18	18
	Gas with dbl metal or ceramic back	36	—	36	12	18
Radiators						
Steam or Hot Water	Gas	36	—	6	6	6
		See Note 5			Firing Side	Opp. Side
Ranges − Cooking Stoves	Oil	30	—	—	—	
Vented or Unvented	Gas	30	—	—	6	6
	Electric	30	—	—	6	6
Clothes Dryers	Gas	6	—	24	6	6
Listed Types	Electric	6	—	24	0	0
Incinerators		See Note 6				
Residential Types	—	36	—	48	36	36

1 Standard clearances may be reduced by affording protection to combustible material in accordance with Table 323.04−B.

2 Rooms which are large in comparison to the size of the appliance are those having a volume equal to at least 12 times the total volume of a furnace and at least 16 times the total volume of a boiler. If the actual ceiling height of a room is greater than 8 feet, the volume of a room should be figured on the basis of a ceiling height of 8 feet.

3 The minimum dimension should be that necessary for servicing the appliance including access for cleaning and normal care, tube removal, etc.

4 For a listed oil, combination gas−oil, gas, or electric furnace this dimension may be 2 inches if the furnace limit control cannot be set higher than 250° F or this dimension may be one inch if the limit control cannot be set higher than 200° F.

5 To combustible material or metal cabinets. If the underside of such combustible material or metal cabinet is protected with asbestos millboard at least 1/4−inch thick covered with sheet metal of not less than No. 28 gauge, the distance may be not less than 24 inches. Also, if the manufacturer of the range, cooktop, or cooking stove specifies a shorter clearance, that clearance may be used instead.

6 Clearance above charging door should be not less than 48 inches.

TABLE 323.04−B
CLEARANCES, INCHES, WITH SPECIFIED FORMS OF PROTECTION*

Type of Protection	Where required clearance with no projection is:											
Applied to the combustible material unless otherwise specified and covering all surfaces within the distance specified as the required clearance with no protection. Thicknesses are minimum.	36 inches			18 inches			12 inches			6 inches		
	Above	Sides & Rear	Vent Connector	Above	Sides & Rear	Vent Connector	Above	Sides & Rear	Vent Connector	Above	Sides & Rear	Vent Connector
(a) 1/4−in. insulating millboard** spaced out 1″***	30	18	30	15	9	12	9	6	6	3	2	3
(b) 28 gage sheet metal on 1/4″ insulating millboard**	24	18	24	12	9	12	9	6	4	3	2	2
(c) 28 gage sheet metal spaced out 1″***	18	12	18	9	6	9	6	4	4	2	2	2
(d) 28 gage sheet metal on 1/4″ insulating millboard** spaced out 1″***	18	12	18	9	6	9	6	4	4	2	2	2
(e) 1/4″ insulated millboard** on 1″ mineral wool batts reinforced with wire mesh or equivalent	18	12	18	6	6	6	4	4	4	2	2	2
(f) 22 gage sheet metal on 1″ mineral wool batts reinforced with wire or equivalent	18	12	12	4	3	3	2	2	2	2	2	2
(g) 1/4″ insulated millboard**	36	36	36	18	18	18	12	12	9	4	4	4

*All clearances shall be measured from the outer surface of the equipment to the combustible material disregarding any intervening protection applied to the combustible material.

**A factory fabricated board formed with noncombustible materials, normally fibers, and having a thermal conductivity in the range of 1 Btu inch per square foot per °F, or less.

***Spacers shall be of noncombustible material.

(2) FURNACES. The input and output capacity of furnaces shall be listed on the nameplate. All nameplates shall show evidence that the equipment has been listed by a recognized testing laboratory.

(a) *Fuel supply.* Furnaces shall be fired with the fuel for which they have been approved, except as provided in par. (d). Fuels shall be supplied to the furnace in the volume and at the pressure required on the label.

(b) *Unvented furnaces and space heaters.* The use of unvented furnaces and space heaters fueled by natural gas, kerosene, alcohol or other fuel shall be prohibited due to concerns about oxygen depletion; contamination from carbon monoxide, carbon dioxide, nitrogen dioxide, formaldehyde and other combustion related contaminants; and water vapor buildups.

(c) *Vented wall furnaces.* Vented wall furnaces shall not be equipped with duct extensions beyond the vertical and horizontal limits of the enclosure unless listed. Vented wall furnaces shall be located to prevent the restriction of air circulation by doors, projections, or other openings. Vented wall furnaces shall be provided with combustion air.

(d) *Conversion burners.* Conversion burners shall be listed by a recognized testing laboratory. The existing equipment shall be reconditioned and defective parts replaced before a conversion burner is installed. Conversion burners shall be installed in accordance with the installation instructions.

(3) HEAT PUMP APPLIANCES. (a) *Size.* Heat pump appliances shall be sized to provide control of the wet and dry bulb temperatures during cooling and maximum performance during heating. The heating balance point shall be considered to determine the outdoor temperature at which the heat pump must operate 100% of the time to offset the dwelling heat loss.

(b) *Auxiliary heaters.* Provisions for auxiliary heat to supplement the heat pump at outdoor temperatures below the balance point shall be provided. Auxiliary heaters shall be sized so that the heat pump auxiliary will offset the dwelling heat loss down to the heating design temperature.

(4) BOILERS. (a) Boilers and solid fuel−fired water−heating appliances that serve a one−or 2−family dwelling, whether located inside or outside the dwelling, shall comply with ch. SPS 341, Boilers and Pressure Vessels.

(b) Solid fuel−fired water−heating appliances installed inside one or two family dwellings are exempt from the requirements of s. SPS 341.49 (3).

Note: The department will accept equipment listed by the American Society of Mechanical Engineers, Underwriters' Laboratories, and the American Gas Association.

Note: The appliances addressed in this section include non−pressurized solid−fuel−fired water−heating appliances used for space heating.

(5) WATER HEATERS USED FOR SPACE HEATING. (a) *Listing.* 1. Water heaters used for space heating shall be listed for such use.

2. The data plate shall indicate that the unit is suitable for simultaneous water heating and space heating.

Note: ANSI Z21.10.1 or ANSI Z21.10.3 are acceptable listing standards for dual use water heaters.

(b) *Sizing.* A dual use water heater shall be sized to provide sufficient hot water to supply both the daily and hourly peak loads of the dwelling.

(c) *Installation.* Dual use water heaters shall be installed to provide both space heating and potable water.

Note: The Wisconsin Uniform Plumbing Code requires dual use water heaters to be installed by a licensed plumber when installed in a new, not−yet−occupied dwelling. The plumbing code also requires that a floor drain be provided, if the water heater is installed on the lowest floor level and that all piping be suitable for potable water.

(d) *Heat exchanger.* A single−wall heat exchanger may not be used with a toxic heat transfer fluid.

(6) LOCATION. (a) *Enclosed spaces.* Except as provided in par. (c), no space heating or water−heating appliance shall be installed in a bedroom, bathroom, closet, or garage unless listed for such installation.

(b) *Garages.* Appliances installed in garages shall have burners and burner ignition devices located at least 18 inches above the floor and shall be protected or located so the furnace is not subject to damage from a vehicle.

(c) *Exceptions.* 1. Vented decorative gas appliances and decorative gas appliances for installation in vented fireplaces may be installed in bedrooms or bathrooms only when both of the following conditions are met:

a. The volume of the space in which the appliance is located is not less than 50 cubic feet per 1000 Btu/h of the combined input rating of all fuel−burning appliances installed in that space. The space may be made up of more than one room if the rooms are connected through doorway openings without doors.

b. The vapor retarder is not continuous on walls and ceilings exposed to the outside atmosphere as allowed under s. SPS 322.38.

2. Water heaters may be installed in a closet located in a bathroom or bedroom where the closet is used exclusively for the water heater, where the enclosed space has a weather−stripped solid door with a self−closing device, and where all air for combustion is obtained from the outdoors.

Note: Section SPS 323.06 still requires combustion air to be provided to the appliance.

History: Cr. Register, November, 1979, No. 287, eff. 6−1−80; r. and recr. (1) (b), and am. (4) (b), Register, February, 1985, No. 350, eff. 3−1−85; correction in (3) made under s. 13.93 (2m) (b) 7., Stats., Register, February, 1985, No. 350; am. (intro.) and Table 23.04−A, r. (4), renum. Figures to ILHR 23.045, Register, January, 1989, No. 397, eff. 2−1−89; correction in (3) made under s. 13.93 (2m) (b) 7., Stats., Register, January, 1989, No. 397; am. (intro.) and (1) (e), r. and recr. Table 23.04−B, Register, March, 1992, No. 435, eff. 4−1−92; r. (1) (e) and cr. (4), Register, March, 2001, No. 543, eff. 4−1−01; CR 08−028: am. (3) Register November 2008 No. 635, eff. 12−1−08; CR 08−043: renum. (intro.), (1) to (3) and (4) to be (1) to (4) and (6) and am. (1), cr. (5) Register March 2009 No. 639, eff. 4−1−09; correction in (6) (c) 1. b. made under s. 13.92 (4) (b) 7., Stats., Register March 2009 No. 639; correction in (1) (c), (4), (6) (c) 1. b. made under s. 13.92 (4) (b) 7., Stats., Register December 2011 No. 672; **CR 15−041: renum. (4) to (4) (a), cr. (4) (b) Register December 2015 No. 720, eff. 1−1−16.**

SPS 323.045 Solid−fuel−burning appliances. **(1)** GENERAL. Solid−fuel−burning appliances shall be installed as specified in this section unless the manufacturer or listing specifies the use of protection or clearances other than those specified in this section. All solid−fuel−burning appliances shall be tested and listed by an accepted testing agency.

Note: Factory−built fireplaces shall comply with s. SPS 321.32.

(2) LOCATION OF APPLIANCES. (a) *Servicing.* Every appliance shall be located to permit access to the appliance. Sufficient clearance shall be maintained around the equipment to permit cleaning of surfaces; the replacement of air filters, blowers, motors, controls and chimney connectors; the lubrication and servicing of moving parts; and the adjustment and servicing of stokers and appliance components.

(b) *Garages.* Solid−fuel−burning appliances may not be installed in a garage unless listed for that application.

(3) CHIMNEYS. (a) Solid−fuel−burning appliances shall be connected to one of the following types of chimneys:

1. 'Factory−built chimneys or vents'. A listed residential−type and building heating appliance chimney may be used with solid−fuel−burning appliances if the chimneys have been tested 3 times to a minimum flue gas temperature exposure of 2100° F, under the conditions specified by the listing agency, for at least 10 minutes each time.

Note: Products listed and labeled as complying with UL 103 − "Type HT" meet this requirement. UL 103 uses several temperature ranges for different products but only the "Type HT"−designated products have met the 2100° F testing requirement.

2. 'Masonry chimneys'. Masonry chimneys shall be constructed as specified in s. SPS 321.30.

(b) Wood−burning equipment shall not be connected to a flue serving a fireplace or other equipment.

(c) The chimney shall be designed to create a natural draft to carry away the products of combustion or provision shall be made for mechanically maintaining constant updraft during equipment operation.

(d) A cleanout opening shall be provided.

(e) A listed, multifuel appliance may be vented into a single flue.

(4) CHIMNEY CONNECTORS. (a) All solid−fuel−burning appliances shall be connected to chimneys with factory−built chimney material, Type L vent material or steel pipe with minimum thicknesses as specified in Table 323.045−A.

TABLE 323.045−A
METAL THICKNESS FOR PIPE CONNECTORS

Diameter of Connector (inches)	Sheet Gage No.	Minimum Thickness (inches)
6 to 10	24	.023
over 10 to 16	22	.029
over 16	16	.056

(b) The required clearance to combustibles for chimney connectors shall be 18 inches. This clearance may be reduced in accordance with Table 323.045−B. The specified protection shall be applied to and cover all combustible material as specified in Figure 323.045−A.

(c) Connectors and chimneys for solid fuel−burning appliances shall be designed, located and installed to permit ready access for internal inspection and cleaning.

(d) 1. Chimney connectors shall have no more than two 90° elbows.

2. The horizontal length shall not exceed 75% of the total vertical height of the entire venting system measured from the appliance outlet.

3. The connector shall maintain a rise of at least 1/4 inch per foot from the appliance outlet to the chimney inlet.

4. Connectors shall be securely supported and joints fastened with a minimum of 3 sheet metal screws or rivets.

5. Appliances used mainly for wood burning shall have the joints assembled so that the crimped end points towards the stove. Appliances burning coal shall have the joints assembled so that the crimped end points away from the appliance.

6. A connector to a masonry chimney shall extend through the wall to the innerface of the liner but not beyond.

7. The effective area of the connector shall not be less than the area of the appliance flue collar.

(e) No chimney connectors may pass through any floor, ceiling, window, door or combustible wall nor be concealed in any closet, attic or similar space. A connector may pass through a combustible wall if the connector is guarded at the point of passage by one of the following methods:

1. Metal ventilated thimble not less than 12 inches larger in diameter than the connector.

2. All combustible material in the wall is cut away from the connector a sufficient distance to provide the required 18−inch clearance. Any material used to close up such openings shall be noncombustible.

(f) A manual, cast iron damper to control draft shall be provided in the chimney connector. The damper shall not obstruct more than 80% of the connector area. Listed solid−fuel appliances whose listing prohibits the use of manual dampers in the connector shall not require a manual damper to be installed.

FIGURE 323.045−A
CONSTRUCTION USING COMBUSTIBLE MATERIAL

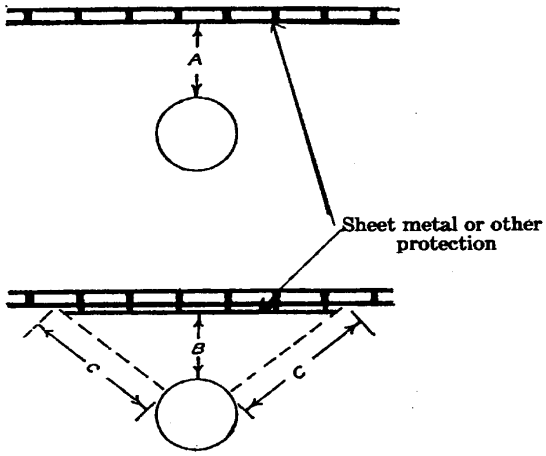

"A" Equals the required clearance with no protection, specified in s. SPS 323.045 (4) (b).

"B" Equals the reduced clearance permitted in accordance with Table 323.045−B. The wall protection should extend far enough in each direction to make 'C' equal to 'A'.

TABLE 323.045−B
CONNECTOR CLEARANCES WITH SPECIFIED FORMS OF PROTECTION[1,2,3,4]

Type of Protection	Minimum Required Connector Clearances (inches)
0.013 in. (28 gage) sheet metal spaced out a minimum of one inch.	9
31/2 in. thick masonry wall spaced out a minimum of one inch and adequately tied to the wall being protected (see Note 4).	9
0.027 in. (22 gage) sheet metal on one−inch mineral wool batts reinforced with wire or equivalent spaced out a minimum of one inch.	3

[1] Spacers and ties shall be of noncombustible material.

[2] All methods of protection require adequate ventilation between protective material and adjacent combustible walls and ceilings.

3 Mineral wool batts (blanket or board) shall have a minimum density of 8 pounds per cubic foot and a minimum melting point of 1550° F.

4 If a single wall connector passes through the masonry wall there shall be at least 1/2 inch of open ventilated air space between the connector and the masonry.

(5) MOUNTING ON FLOORS. Appliances shall be placed on surfaces as described in Table 323.045−C. Solid−fuel−burning appliances listed specifically for installation on a floor constructed of combustible material may be installed in accordance with the terms of the listing and the manufacturer's instructions.

(5m) MOUNTING ON THE GROUND. Ground−based solid−fuel−burning appliances shall be installed in accordance with the manufacturer's specifications.

(6) CLEARANCES. (a) *General.* Solid−fuel−burning appliances shall be installed with clearances not less than specified in Table 323.045−D, except as provided in pars. (b) and (c).

(b) *Listed appliances exception.* Listed appliances shall be installed in accordance with the terms of their listing if greater clearances other than those specified by Table 323.045−D are required in accordance with the listing.

(c) *Clearance with protection exception.* Solid−fuel−burning appliances may be installed with reduced clearances provided the combustible material is protected as described in Table 323.045−E. The specified protection shall be applied to and cover all combustible material as specified in Figure 323.045−B.

(7) ACCESSORIES. Accessories for solid fuel−burning appliances such as heat exchangers, stove mats, floor pad and protection shields, shall be listed and shall be installed in accordance with the terms of their listing.

(8) SUPPLEMENTAL UNITS. Supplemental solid−fuel−burning units connected to a furnace shall be connected to the warm air side of the furnace as illustrated in Figures 323.045−C to E, and shall be installed in accordance with all of the following:

(a) *Return air duct.* The area of the return air duct shall be at least equal to the area of the warm air supply duct. The return air duct shall be of the same material as specified for supply air ducts. Return air grilles shall not be located in bathrooms, kitchens, garages, utility spaces or in a confined space defined under s. SPS 323.06 in which a draft diverter or draft regulator is located.

(b) *Blower.* The blower on the furnace shall maintain the manufacturer's specifications for cubic feet per minute air flow and static pressure when the supplemental unit is in operation.

(c) *Outside air intake.* The outside air intake shall be connected to the cold air return plenum of the furnace. A volume damper shall be placed in the duct for the fresh air intake.

(d) *Thermostat.* The thermostat control on the supplemental heating unit shall activate the blower motor at a temperature between 100° and 120° F.

(e) *Supplemental units.* Supplemental solid−fuel−burning units shall be installed to maintain a 3−foot clearance between the unit and the furnace or shall be installed in accordance with the listings of both the supplemental unit and the furnace if such an installation is specifically covered by the listings.

TABLE 323.045−C
FLOOR MOUNTINGS FOR SOLID FUEL−BURNING APPLIANCES

Kind of Appliance	Allowed Mounting
(1) All forced air and gravity furnaces, steam and water boilers. or	Floors of fire−resistive construction with noncombustible flooring and surface finish, or fire−resistive arches or slabs. This construction may not have combustible material against the underside. Such construction shall extend at least 18 inches beyond the appliance on all sides.
(2) Residential−type ranges, water heaters, fireplace stoves,room heaters and combination fireplace stove/room heaters, having less than 2 inches of ventilated open space beneath the fire chamber or base of the appliance.	These appliances shall not be placed on combustible floors.
(3) Residential−type ranges, water heaters, fireplace stoves, room heaters and combination fireplace stove/room heaters having legs or pedestals providing 2 to 6 inches of ventilated open space beneath the fire chamber or base of the appliance.	On combustible floors when such floors are protected by 4 inches of hollow masonry, laid to provide air circulation through the masonry layer. Such masonry shall be covered with 24 gage sheet metal. The required floor protection shall extend at least 18inches on all sides of the appliance. Noncombustible floors shall extend at least 18 inches on all sides of the appliance.

(4) Residential−type ranges, water heaters, fireplace stoves, room heaters and combination fireplace stove/room heaters having legs or pedestals providing over 6 inches of ventilated open space beneath the fire chamber or base of the covered appliance.

On combustible floors when such floors are protected by closely spaced masonry units of brick, concrete or stone, which provide at least 2 inches of thickness. Such masonry shall be covered by or placed over a sheet of 24 gage sheet metal.

The required floor protection shall extend at least 18 inches on all sides of the appliance.

Noncombustible floors shall extend at least 18 inches on all sides of the appliance.

TABLE 323.045−D STANDARD CLEARANCES FOR SOLID−FUEL−BURNING APPLIANCES

Type of Appliance	Above Top of Casing or Appliance. Above Top and Sides of Furnace Plenum or Bonnet (inches)	Minimum Standard Clearances (inches)		
	Above Top of Casing or Appliance. Above Top and Sides of Furnace Plenum or Bonnet (inches)	From Front	From Back	From Sides
Residential Appliances				
Steam Boilers − 15 psi				
Water Boilers − 250° F max.	6	48	6	6
Water Boilers − 200° F max.				
All Water Walled or Jacketed				
Furnaces				
Gravity and Forced Air	18	48	18	18
Room Heaters, Fireplace Stoves, Combinations	36	36	36	36
			Firing Side	Opp. Side
Ranges				
Lined Firechamber	30	36	24	18
Unlined Firechamber	30	36	36	18

TABLE 323.045−EMINIMUM ALLOWABLE APPLIANCE CLEARANCE WITH PROTECTION[1,2,3,4,5,6]

Type of Protection	Unprotected Clearances (inches) From Table 323.045−D								
	For Ceilings				For Walls				
	6	18	30	36	6	18	24	36	48
3 1/2 in. thick masonry wall without ventilated air space	−	−	−	−	4	12	16	24	32
1/2 in. thick noncombustible insulation board over 1 in. glass fiber or mineral wool batts without ventilated air space	4	12	20	24	3	9	12	18	24
0.024 in. (24 gage) sheet metal over 1 in. glass fiber or mineral wool batts reinforced with wire, or equivalent, or rear face with ventilated air space	3	9	15	18	2	6	8	12	16
3 1/2 in. thick masonry wall with ventilated air space	−	−	−	−	2	6	8	12	16
0.024 in. (24 gage) sheet metal with ventilated air space	3	9	15	18	2	6	8	12	16
1/2 in. thick noncombustible insulation board with ventilated air space	3	9	15	18	2	6	8	12	16
0.024 in. (24 gage) sheet metal with ventilated air space over0.024 in. (24 gage) sheet metal with ventilated air space	3	9	15	18	2	6	8	12	16
1 in. glass fiber or mineral wool batts sandwiched between two sheets 0.024 in. (24 gage) sheet metal with ventilated air space	3	9	15	18	2	6	8	12	16

[1] Spacers and ties shall be of noncombustible material. No spacers or ties shall be used directly behind appliance or conductor.

[2] With all clearance reduction systems using a ventilated air space, at least two sides of the protection shall be open to provide adequate air circulation. There shall be at least one inch between the clearance reduction system and combustible walls and ceilings.

[3] Mineral wool bats, blanket or board shall have a minimum density of 8 lb. per cubic foot and have a minimum melting point of 1,500° F.

[4] Insulation material used as part of a clearance reduction system shall have a thermal conductivity (k) of One (Btu) (in)/(Sq. ft.) (Hr.) (°F) or less. Insulation board shall be formed of noncombustible material.

[5] If a single wall connector passes through a masonry wall used as a wall shield, there shall be at least 1/2 inch of open, ventilated space between the connector and the masonry.

[6] Clearances in front of the loading door or ash removal door of the appliance shall not be reduced.

Published under s. 35.93, Wis. Stats., by the Legislative Reference Bureau.

FIGURE 323.045−B

PROTECTION OF COMBUSTIBLE WALLS AND FLOORS

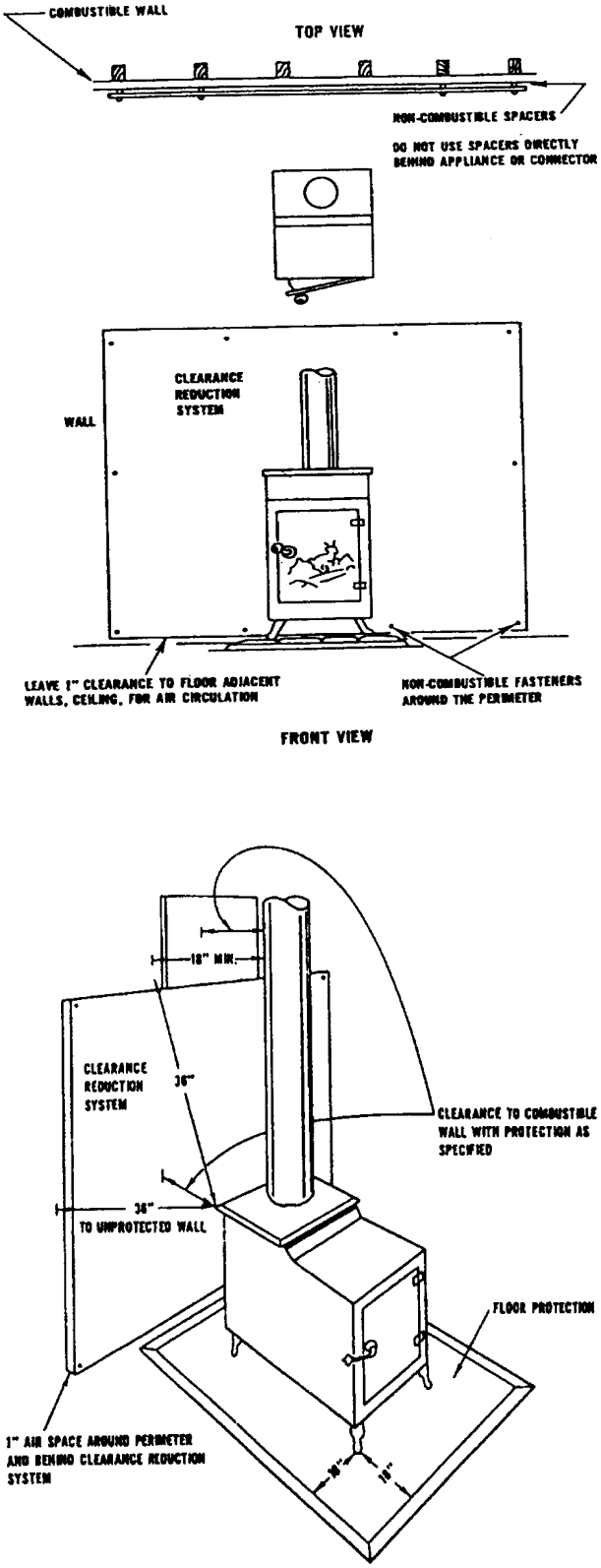

FIGURE 323.045−C

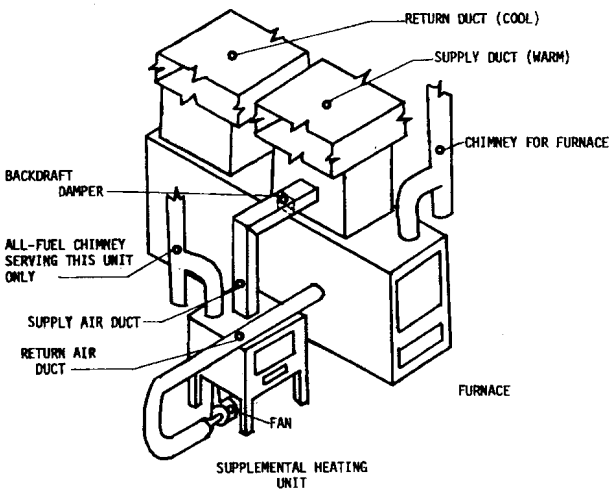

FIGURE 323.045−D

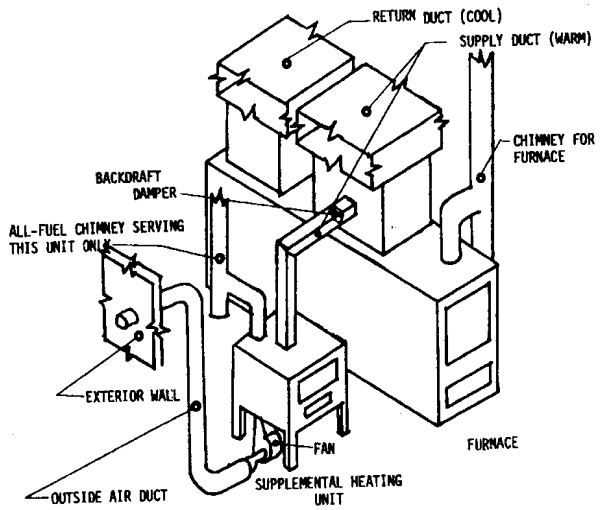

(9) SUPPLY DUCTS. Supply ducts connected to solid−fuel−burning appliances shall have the following minimum clearances to combustibles:

(a) *Horizontal ducts.* The clearance from combustibles for horizontal ducts shall be as specified in Table 323.045−F.

TABLE 323.045−F

Distance of Ducts From Bonnet or Plenum (inches)	Clearance to Combustibles[1] Required (inches)
0 to 36	18
over 36 to 72	6
over 72	1

[1] Clearance can be reduced in accordance with Table 323.045−B

(b) *Vertical ducts.* 1. Air shall travel 6 feet and change directions equivalent to one 90° turn before entering an enclosure of combustible material.

2. Ducts shall have 3/16 inch clearance between the duct and any combustible material.

Published under s. 35.93, Stats. Updated on the first day of each month. Entire code is always current. The Register date on each page is the date the chapter was last published.

(10) COMBINATION APPLIANCES. Appliances capable of burning multi−types of fuel shall be listed and installed in accordance with their listing.

FIGURE 323.045−E

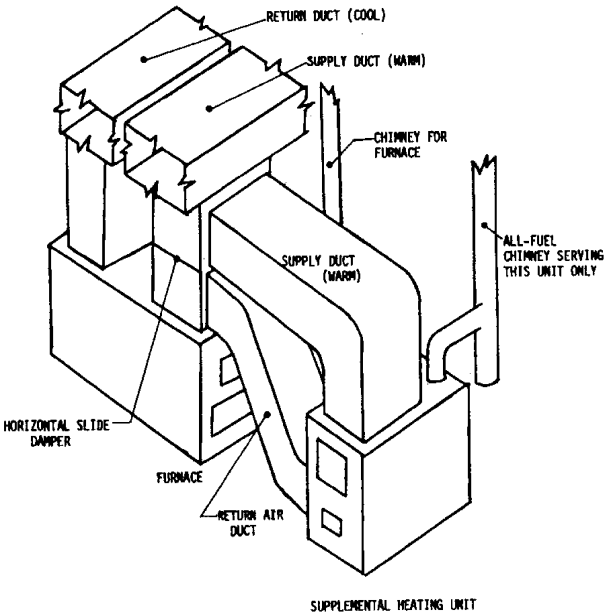

History: Cr. Register, February, 1985, No. 350, eff. 3−1−85; am. (1), (3) (a) 1., (4) (b), (5), (6) (a), (6) (b) 2., (8) (intro.) and (9) (a), renum. Tables 23.045−B to E to be Tables 23.045−C, D, B and F and am. B and F, Figures 23.045−C to E renum. from Figures 23.01−A to C, cr. (2) (c), (3) (b) to (e) and (8) (e), Table 23.045−E and Figure 23.045−B, r. and recr. (6) (b) 1., Register, January, 1989, No. 397, eff. 2−1−89; am. (1), (2) (b) (intro.), (3) (a) 1., (8) (a) and Table A, cr. (2) (b) 4., r. and recr. Table C, Register, March, 1992, No. 435, eff. 4−1−92; am. Table C, Register, November, 1995, No. 479, eff. 12−1−95; r. (2) (b) and renum. and am. (2) (c) to be (2) (b), Register, March, 2001, No. 543, eff. 4−1−01; CR 08−043: am. (2) (b) Register March 2009 No. 639, eff. 4−1−09; correction in (3) (a) 2., (4) (a), (b), (5) (a), (6) (a) (intro.), 1., 2., (8) (intro.), (a), (9) (a), Figure 323.045−A, Table 323.045−E, 323.045−F made under s. 13.92 (4) (b) 7., Stats., Register December 2011 No. 672; **CR 15−041: renum. (5) (a) to (5), cr. (5m), cr. (6) (a) (title), renum. (6) (a) (intro.) to (a) and am. (intro.), am. (8) (intro.) Register December 2015 No. 720, eff. 1−1−16.**

SPS 323.05 Safety controls. High limit, maximum outlet air temperature and similar safety controls shall be provided on heating equipment.

History: Cr. Register, November, 1979, No. 287, eff. 6−1−80.

SPS 323.06 Combustion air. (1) SCOPE. (a) Naturally vented appliances and other appliances that require air for combustion and dilution of flue gases to be taken from within the building shall comply with this section.

(b) Appliances that are provided with a direct supply of outside air for combustion in accordance with the manufacturer's installation instructions and listing are not required to comply with this section.

(c) Where the appliance listing and manufacturer's instructions are more stringent than the provisions of this section, the listing and manufacturer's instructions apply.

(d) Listed fireplace stoves are not required to comply with this section if permitted in the manufacturer's instructions.

(e) Masonry fireplaces shall conform to the requirements of s. SPS 321.29.

(f) Listed factory−built fireplaces shall comply with the manufacturer's recommendations and shall conform with the requirements of s. SPS 321.32.

(2) METHODS FOR PROVIDING AIR. Air for combustion and dilution shall be provided in accordance with one of the following:

(a) If the vapor retarder is not continuous on walls and ceilings exposed to the outside atmosphere as allowed by s. SPS 322.38, air may be provided from inside the building in accordance with sub. (3).

(b) Air may be provided from outside the building in accordance with sub. (4).

(c) The appliance may be installed in accordance with its listing and manufacturer's instructions. Where all walls and ceilings exposed to the outside atmosphere are provided with a continuous vapor retarder, any requirements for unusually tight construction shall be met.

(d) An engineered system providing an adequate supply of air for combustion ventilation and dilution of flue gases may be installed if approved by the department.

(3) AIR FROM INSIDE THE BUILDING. (a) 1. The equipment shall be located in a space with a volume not less than 50 cubic feet per 1000 Btu/h of the combined input rating of all fuel−burning appliances drawing combustion and dilution air from that space.

2. The space may be made up of more than one room if the rooms are connected through doorways without doors or connected through sets of openings described in par. (b).

(b) 1. When needed to connect rooms, two openings shall be provided, one within one foot of the ceiling of the room and one within one foot of the floor.

2. The net free area of openings shall be calculated in accordance with sub. (5).

3. The net free area of each opening shall be a minimum of one square inch per 1000 Btu/h of combined input rating of the fuel burning appliances drawing combustion and dilution air from the communicating rooms, but shall be not less than 100 square inches.

(4) AIR FROM OUTSIDE THE BUILDING. (a) When air for combustion and dilution is provided from outside the building, as allowed under sub. (2) (b), one of the methods specified in pars. (b) to (d) shall be used.

(b) Openings may be provided to connect rooms containing appliances to the outdoors.

1. a. Two openings shall be provided, one within one foot of the ceiling of the room and one within one foot of the floor.

b. Openings may connect directly to the outdoors or to the outdoors through a horizontal or vertical duct.

c. The net free area of openings shall be calculated in accordance with sub. (5).

2. The net free area of each direct opening to the outdoors not using a duct shall be a minimum of one square inch per 4000 Btu/h of combined input rating of the fuel−burning appliances drawing combustion and dilution air from the room.

3. a. The net free area of each opening connected to the outdoors through a horizontal duct shall be a minimum of one square inch per 2000 Btu/h of combined input rating of the fuel−burning appliances drawing combustion and dilution air from the room.

b. The cross−sectional area of the duct shall be equal to or greater than the required size of the opening.

4. a. The net free area of each opening connected to the outdoors through a vertical duct shall be a minimum of one square inch per 4000 Btu/h of combined input rating of the fuel−burning appliances drawing combustion and dilution air from the room.

b. The cross−sectional area of the duct shall be equal to or greater than the required size of the opening.

(c) 1. Where all appliances drawing air for combustion and dilution from the room are gas appliances, air may be provided via a single opening to connect the room to the outdoors in accordance with this paragraph.

2. a. The opening shall be located within one foot of the ceiling of the room.

b. The opening may connect directly to the outdoors, may connect to the outdoors through a horizontal duct, or may connect to the outdoors through a vertical duct.

c. The net free area of the opening shall be calculated in accordance with sub. (5).

3. a. The net free area of the opening shall be a minimum of one square inch per 3000 Btu/h of combined input rating of the fuel−burning appliances drawing combustion and dilution air from the room, and not less than the combined cross−sectional flow areas of the appliance flue collars or draft hood outlets.

b. The cross−sectional area of the duct shall be equal to or greater than the required size of the opening.

4. The appliances shall have a minimum clearance to the surfaces of the room of one inch at the sides and back of the appliance and 6 inches at the front of the appliance.

(d) 1. A combination of openings to the outside and openings to other rooms may be used in accordance with this paragraph.

2. a. One opening shall connect directly to the outdoors, connect to the outdoors through a horizontal duct, or connect to the outdoors through a vertical duct.

b. The net free area of the openings shall be calculated in accordance with sub. (5).

c. The net free area of the opening shall be a minimum of one square inch per 5000 Btu/h of combined input rating of the fuel burning appliances drawing combustion and dilution air from the room.

d. The cross−sectional area of a duct, if used, shall be equal to or greater than the required size of the opening.

3. a. The equipment shall be located in a space with a volume not less than 50 cubic feet per 1000 Btu/h of the combined input rating of all fuel−burning appliances installed in that space.

b. The space may be made up of more than one room if the rooms are connected through openings without doors or connected through sets of openings described in subd. 4.

4. a. When needed to connect rooms, two openings shall be provided, one within one foot of the ceiling of the room and one within one foot of the floor.

b. The net free area of openings shall be calculated in accordance with sub. (5).

c. The net free area of each opening shall be a minimum of one square inch per 1000 Btu/h of combined input rating of the fuel burning appliances drawing combustion and dilution air from the communicating rooms, but shall be not less than 100 square inches.

(5) NET FREE AREA CALCULATION. (a) The required size of openings for combustion and dilution air shall be based on the net free area of each opening.

(b) The net free area of an opening shall be that specified by the manufacturer of the opening covering or by a source approved by the department.

(c) In the absence of such information, openings covered with metal louvers shall be deemed to have a net free area of 75 percent of the area of the opening, and openings covered with wood louvers shall be deemed to have a net free area of 25 percent of the area of the opening.

(6) INTERLOCKING OF DAMPERS. (a) Where the combustion air openings are provided with volume, smoke or fire dampers, the dampers shall be electronically interlocked with the firing cycle of the appliances served, so as to prevent operation of any appliance that draws combustion and dilution air from the room when any of the dampers are closed.

(b) Manually operated dampers shall not be installed in combustion air openings.

(7) SIMULTANEOUS OPERATION. (a) The equipment and appliance within every room containing fuel−burning appliances shall be installed so as to allow the free circulation of air.

(b) Provisions shall be made to allow for the simultaneous operation of mechanical exhaust systems, fireplaces, clothes dryers or other equipment and appliances operating in the same room or space from which combustion air and dilution air is being drawn. The provisions shall prevent the operation of the appliances, equipment and systems from affecting the supply of combustion and dilution air.

Note: Wood typically has a heating value of 8600 BTU per pound.

History: Cr. Register, November, 1979, No. 287, eff. 6−1−80; am. (intro.), (1) (a) and (2) (a), Register, January, 1989, No. 397, eff. 2−1−89; r. and recr. Register, March, 2001, No. 543, eff. 4−1−01; correction in (2) (a) made under s. 13.92 (4) (b) 7., Stats., Register March 2009 No. 639; correction (2) (a) made under s. 13.92 (4) (b) 7., Stats., Register December 2011 No. 672; **CR 15−041: cr. (1) (d) to (f) Register December 2015 No. 720, eff. 1−1−16.**

SPS 323.062 Mechanical draft systems. Where a mechanical draft system, such as a fan is used, provision shall be made to prevent the flow of gas to the main burners when the draft system is not performing so as to satisfy the operating requirements of the system for safe performance.

History: Cr. Register, March, 2001, No. 543, eff. 4−1−01.

SPS 323.065 Equipment maintenance information. Required regular maintenance actions for equipment shall be clearly stated and incorporated on a readily accessible label. The label may be limited to identifying, by title or publication number, the operation and maintenance manual for that particular model and type of equipment. Maintenance instructions shall be furnished for equipment which requires preventive maintenance for efficient operation. Manufacturer's manuals for all installed heating and cooling equipment and service water heating equipment shall be provided.

History: Cr., Register, January, 1999, No. 517, eff. 2−1−99.

Subchapter IV — Delivery Systems

SPS 323.07 Air distribution systems. (1) SIZING. All air distribution systems shall be sized using the velocities and static pressure losses listed in Table 323.07.

TABLE 323.07
DUCT VELOCITIES

Designation	Maximum Static Pressure Loss (in WG/100 ft)	Minimum Velocity (feet/minute)	Maximum Velocity (feet/minute)
Main trunk duct	.10	700−900	800−1200
Branch duct	.10	600	700−1000
Branch riser	.10	500	650−800
Outdoor intake	.10	500	800
Grilles or openings	.10	400	600
Return air door undercuts	.10	200	300
Return air door or wall louvers	.10	200	300

WG = Water gauge per 100 feet.

(2) SYSTEM SIZING. The distribution system, including the evaporator coil, air filters (installed external to the heating unit), ducts, fittings, grilles and registers, shall be sized so that the total external static pressure shall not exceed the static pressure capacity of the fan at the system rated air flow.

(3) CHANGES IN DUCT SIZE. Where duct sizes are changed, the slope angle of the transition duct shall not exceed 45°.

History: Cr. Register, November, 1979, No. 287 eff. 6−1−80; correction in (1) made under s. 13.92 (4) (b) 7., Stats., Register December 2011 No. 672.

SPS 323.08 Ductwork. (1) DUCT USE. Ducts designed for the transmission of air shall be used for no other purpose.

(2) INTERIOR DUCTS. All interior ducts shall be constructed in accordance with the following:

(a) *Supply and return air ducts.* Supply and return air ducts shall comply with this paragraph except that ducts attached to appliances may be constructed of materials specified in the appliance listing.

1. Kitchen exhaust ducts and ducts for air exceeding 250° F shall be constructed of sheet metal or lined with sheet metal or constructed of other noncombustible noncorrugated materials.

2. Ducts connected to furnaces shall be constructed of sheet metal for at least 6 feet from the furnace.

3. Spaces formed by unlined wood joists, studs or wood I−joists with solid webs may be used as return air ducts. Spaces used as return air ducts shall be cut off from all remaining unused portions of the space by tight−fitting stops of sheet metal or of wood joist material. Bridging shall be removed from the joist space.

(b) *Under−floor plenums.* An under−floor space may be used as a plenum in a single dwelling unit in accordance with this section.

1. The use of the under−floor space shall be limited to buildings not more than 2 stories in height. Except for the floor immediately above the under−floor plenum, supply ducts shall be provided extending from the plenum to registers or other floor levels.

2. The under−floor spaces shall not be used for storage, shall be cleaned of all loose scrap material and shall be tightly and substantially enclosed.

3. The enclosing material of the under−floor space, including the side wall insulation and vapor barriers, shall not be more flammable than one−inch (nominal) wood boards (flame spread classification of 200).

4. Access shall be through an opening in the floor which shall be 18 inches by 24 inches.

5. The furnace supplying warm air to the under−floor space shall be equipped with an automatic control which will start the air circulating fan when the air in the furnace bonnet reaches a temperature not higher than 150° F. Such control shall be one that cannot be set higher than 150° F.

6. The furnace supplying warm air to the under−floor space shall be equipped with an approved temperature limit control that will limit outlet air temperature to 200° F.

7. A noncombustible receptacle shall be placed below each floor opening into the air chamber. The receptacle shall be securely suspended from the floor members and shall be not more than 18 inches below the floor opening. The area of the receptacle shall extend 3 inches beyond the opening on all sides. The perimeter of the receptacle shall have a vertical lip at least one inch high at the open sides if it is at the level of the bottom of the joist, or 3 inches high if the receptacle is suspended.

8. Floor registers shall be designed for easy removal to permit access for cleaning the receptacles.

9. Exterior walls and interior stud partitions shall be firestopped at the floor.

10. Each wall register shall be connected to the air chamber by a register box or boot.

11. A duct conforming to par. (a) shall extend from the furnace supply outlet at least 6 inches below combustible framing.

12. The entire ground surface and enclosing exterior walls of the under−floor space shall be covered with a vapor barrier having a vapor permeability rating of one perm or less and a flame spread rating of 200 or less.

13. Fuel gas lines may not be located within the under−floor space.

14. A smoke detector shall be placed in the under−floor space. The alarm and low−battery signal of the smoke detector shall be audible in the occupied areas of the dwelling, when actuated.

15. The exterior walls of the under−floor spaces shall be insulated in accordance with subch. IV of ch. SPS 322. The insulation may not be omitted under the provisions of s. SPS 322.21 or subch. VII of ch. SPS 322.

Note: Subch. VII of ch. SPS 322 was repealed.

16. Electrical wiring installed in the plenum shall be in conformance with the Wisconsin Administrative Electrical Code Volume 2.

(3) EXTERIOR DUCTS. (a) *General.* Except as provided in par. (b), ducts, which are located in garages, storage attics and similar spaces susceptible to physical damage, shall be constructed of galvanized steel or corrosion−resistive metal.

(b) *Exception.* Plastic may be used for bath fan or air−to−air heat exchanger exhaust runs located in spaces outside the dwelling.

(4) UNDERGROUND DUCTS. Ducts, plenums and fittings constructed of metal encased in concrete or ceramic, or other approved materials, may be installed in the ground. Encasement of underground supply air ducts shall be moistureproof.

Note: See s. SPS 322.42 for insulation requirements for underground ducts.

(5) DUCT CONSTRUCTION. Ductwork shall be constructed and installed in accordance with any one of the appropriate following standards:

(a) ASHRAE Handbook HVAC Systems and Equipment.

(b) SMACNA, Residential Comfort System Installation Standards Manual

(c) SMACNA, HVAC Duct Construction Standards−Metal and Flexible.

(d) SMACNA Fibrous Glass Duct Construction Standards.

(e) ASHRAE HVAC Applications Handbook.

(f) NAIMA Fibrous Glass Duct Construction Standards.

(6) THICKNESS. Sheet metal ducts shall conform to the minimum thicknesses listed in Table 323.08−A.

(7) DUCT SUPPORT. Rigid metal ductwork shall be supported in accordance with Table 323.08−B.

TABLE 323.08−A
DUCT CONSTRUCTION MINIMUM SHEET METAL GAUGES

	Minimum thickness galvanized sheet gauge	Minimum thickness aluminum B & S gauge
Metal gauges (duct not enclosed in partitions)		
Round ducts		
Diameter, inches		
Less than 12	30	26
12−14	28	26
15−18	26	24
Over 18	24	22
Rectangular Ducts		
Width, inches		
Less than 14	28	24
14−24	26	22
25−30	24	22
Over 30	22	20
Metal gauges (ducts enclosed in partition)		
Width, inches		
14 or less	30	26
Over 14	28	24

TABLE 323.08−B
DUCT SUPPORT FOR RIGID DUCTS — 16 GAGE MAXIMUM THICKNESS

Duct Type	Maximum Size	Duct Position	Hanger Type, Size and Spacing[1]
Circular	10″ diam.	Vertical	Strap — one 18 ga. galv. steel X 2″ @ 12′ o.c.
		Horizontal	Strap — one 22 ga. galv. steel X 1″ @ 12′ o.c. Rod — one ¼″ @ 12′ o.c. Wire — one 12 ga. @ 12′ o.c.
	18″ diam.	Vertical	Strap — one 16 ga. galv. steel X 2″ @ 12′ o.c.
		Horizontal	Strap — one 22 ga. galv. steel X 1″ @ 12′ o.c. Rod — one ¼″ @ 12′ o.c. Wire — one 8 ga. @ 12′ o.c.; or Wire — two 12 ga. @ 12′ o.c.
Rectangular	60″ perim.	Vertical	Strap — one 18 ga. galv. steel X 2″ @ 12′ o.c.
		Horizontal	Strap — pair[2] 22 ga. galv. steel X 1″ @ 10′ o.c. Rods or Wires — pair[2] 10 ga. @ 10′ o.c.; or Rods or Wires — pair[2] 12 ga. @ 5′ o.c.
	144″ perim.	Vertical	Strap— one 16 ga. galv. steel X 2″ @ 12′ o.c.
		Horizontal	Strap — pair[2] 18 ga. galv. steel X 1″ @ 10′ o.c.; or Strap — pair[2] 20 ga. galv. steel X 1″ @ 8′ o.c.; or Strap — pair[2] 22 ga. galv. steel X 1″ @ 5′ o.c. Rods or Wires — pair[2] 3/8″ @ 10′ o.c.; or Rods or Wires — pair[2] ¼″ @ 8′ o.c.

[1] These hangers are the minimum required to support the weight of the duct off of the joist, stud or similar structure. The band, wire or strap cradling the duct shall not cause any deformation of the duct.

[2] "Pair" means that there are 2 vertical legs. One continuous strap can form both vertical legs.

Note: This table does not prohibit nailing for duct support.

(8) JOINTS AND SEAMS. All joints and seams shall be securely fastened or locked. Round pipe slip joints shall be lapped at least one inch.

(9) VIBRATION CONTROL. When used, vibration isolation connectors shall be installed at the joint between the duct and fan or heating equipment. Vibration isolation connectors shall not be used where the air temperature is in excess of 250° F.

(10) AIR PASSAGEWAYS OF ENVELOPE DWELLINGS. The air passageways of envelope type dwellings shall comply with this subsection.

(a) No heating equipment shall be placed in the air passageways.

(b) Wood exposed to the air passageways shall be of at least 2 inches nominal thickness.

(c) Finishes and insulation exposed to the air passageway shall have a flame spread rating of 25 or less and a smoke development rating of 50 or less.

(d) A vapor barrier shall be installed on the warm side of insulation which forms a part of the thermal envelope of the dwelling. In the roof−ceiling air passageway, a vapor barrier for the insulation of the ceiling may be omitted if heated air is circulated on both sides of the ceiling insulation. The insulation on the roof side of the air passageway shall be provided with a vapor barrier on the warm side of the insulation. Any vapor barrier exposed to circulating air shall have a flame spread rating of 25 or less and a smoke development rating of 50 or less.

History: Cr. Register, November, 1979, No. 287, eff. 6−1−80; cr. (2) (b) and (10), Register, January, 1989, No. 397, eff. 2−1−89; r. and recr. (2) (a), am. (3) and (6), Register, March, 1992, No. 435, eff. 4−1−92; am. (2) (a) 3., (2) (b) 15., (3) (a), and (4), Register, November, 1995, No. 479, eff. 12−1−95; r. and recr. (2) (b) 15. and (5), Register, January, 1999, No. 517, eff. 2−1−99; CR 08−043: r. and recr. (7) and Table 23.08−B Register March 2009 No. 639, eff. 4−1−09; correction in (2) (b) 15. made under s. 13.92 (4) (b) 7., Stats., Register March 2009 No. 639; CR 09−104: am. (4) Register December 2010 No. 660, eff. 1−1−11; correction in (2) (b) 15., (6), (7) made under s. 13.92 (4) (b) 7., Stats., Register December 2011 No. 672.

SPS 323.09 Dampers, registers and grilles. (1) VOLUME AND BACKDRAFT DAMPERS. (a) Volume duct dampers shall be provided to permit balancing of the system.

(b) Volume dampers shall be provided with access.

Note: Acceptable means of access include a manufactured access panel, an air grille used as a cover, a plastic ceiling cap or a damper accessible through an air diffuser or grille.

(c) Supply ducts may not terminate in a garage unless a backdraft damper is provided.

(2) AIR REGISTERS AND GRILLES. (a) *Supply air registers.* All supply air outlets shall be provided with registers or devices which will provide a uniform distribution of air.

(b) *Return air grilles.* Return air grilles shall not be located in bathrooms, kitchens, garages, utility spaces or a confined space in which a draft diverter or draft regulator is located. All other habitable spaces shall have permanent openings to a return air grille equal in area to the supply outlet serving those areas. At least one return air opening shall be provided for each floor.

History: Cr. Register, November, 1979, No. 287, eff. 6−1−80; CR 08−043: renum. (1) to (1) (a), cr. (1) (b) Register March 2009 No. 639, eff. 4−1−09.

SPS 323.10 Piping. (1) PIPE SIZES AND ARRANGEMENT. All steam and hot water supply and return piping, air−line piping and auxiliary equipment shall be of appropriate sizes, elevations and arrangements to accomplish the calculated results without stress or other detriment.

Note: The sizes of pipe to be used for mains and risers may be selected from the ASHRAE Guide and Data Book, published by the American Society of Heating, Refrigerating and Air Conditioning Engineers; or the manuals published by the Institute of Boiler and Radiator Manufacturers or the Mechanical Contractors Association of America.

(2) EXPANSION AND CONTRACTION. The piping for the heating system shall be equipped with anchors, expansion swings or joints, supports and similar devices to relieve stress and strain caused by temperature change of the pipe material.

(3) PIPE INSULATION. Unguarded steam, hot water supply and return piping shall be covered with insulating material where the pipes pass through occupied areas and the surface temperature exceeds 180° F.

(4) STEAM AND HOT WATER PIPES. No pipe carrying hot water or steam at a surface temperature exceeding 250° F shall be placed within one inch of any combustible material, pass through a combustible floor, ceiling or partition unless the pipe is protected by a metal sleeve one inch larger in diameter than the pipe or with approved pipe covering.

(5) BALANCING. Balancing cocks shall be provided in each circuit of a hot water distribution system.

History: Cr. Register, November, 1979, No. 287, eff. 6−1−80.

Subchapter V — Chimneys and Vents

SPS 323.11 General requirements. (1) TYPES OF CHIMNEYS AND VENTS. All heating appliances using solid, liquid or gas fuels shall be vented to the outside by an all−fuel factory−built, masonry chimney or other listed venting system designed to remove the products of combustion.

(2) TERMINATION. (a) *Chimneys.* All listed factory manufactured chimneys depending on a principle of gravity for the removal of the products of combustion shall terminate at the location specified in the product listing. For masonry chimneys or where termination location is not specified as a part of the listing, the chimney shall extend at least 3 feet above the highest point where the chimney passes through the roof of the building, and at least 2 feet higher than any ridge, peak, wall, or roof within 10 feet horizontally of the chimney.

(b) *Vents.* Gas and oil appliance vents shall terminate in locations specified in their listings.

(3) SIZING. Vents for new or replacement equipment shall be sized to adequately exhaust combustion products from the dwelling.

Note: The department recommends vent sizing in accordance with NFPA 54, National Fuel Gas Code or its appendix.

History: Cr. Register, November, 1979, No. 287, eff. 6−1−80; renum. (intro) to (2) to be (1) to (3) and am. (1), Register, February, 1985, No. 350, eff. 3−1−85; r. (3), Register, January, 1989, No. 397, eff. 2−1−89; am. (2), Register, March, 1992, No. 435, eff. 4−1−92; cr. (3), Register, November, 1995, No. 479, eff. 12−1−95.

SPS 323.12 Masonry chimneys. Masonry chimneys shall conform to the requirements of s. SPS 321.30.

History: Cr. Register, November, 1979, No. 287, eff. 6−1−80; r. and recr. Register, February, 1985, No. 350, eff. 3−1−85; am. (8), Register, March, 1992, No. 435, eff. 4−1−92; r. and recr., November, 1995, No. 479, eff. 12−1−95; correction made under s. 13.92 (4) (b) 7., Stats., Register December 2011 No. 672.

SPS 323.13 Factory−built chimneys or vents. Factory−built chimneys or vents shall be of an approved type.

Note: The department recognizes as approved, factory−built chimneys or vents designated as "residential type and building heating appliance," "building heating appliance," "B," "BW," and "L" types listed by Underwriters' Laboratories, Inc.

(1) RESIDENTIAL TYPE AND BUILDING HEATING APPLIANCE. An approved "residential type and building heating appliance" chimney may be used with liquid or gas−fired heating appliances where the flue gas temperature does not exceed 1000° F continuously, and does not exceed 1400° F for infrequent brief periods of forced firing.

(2) TYPE "B". An approved type "B" gas vent may be used with a vented, recessed wall heater.

(3) TYPE "BW". An approved type "BW" gas vent may be used with a vented, recessed wall heater.

History: Cr. Register, November, 1979, No. 287, eff. 6−1−80; am. (1), Register, March, 1992, No. 435, eff. 4−1−92.

SPS 323.14 Gas vents. (1) GENERAL. (a) All gas−fired equipment shall be provided with vent pipes conforming with s. SPS 323.15 (2) (e), unless the manufacturer specifies other materials.

(b) Plastic pipes and fittings used in venting flue gas shall bear the manufacturer's identification data.

(2) DRYER VENTING. (a) 1. All venting for clothes dryers, including for electric dryers, shall be rigid and smooth−walled. The connection to the dryer shall be made in accordance with the manufacturer's recommendations.

2. Gas−fired clothes dryers shall be provided with metal venting.

Note: Section SPS 322.39 (6) requires all dryer venting to terminate outside the structure.

(b) Where dryer vent piping is concealed, a rigid metal vent pipe conforming with s. SPS 323.15 (2) (e) shall be used.

(3) VENTING SYSTEM LOCATION. (a) A venting system shall terminate at least 3 feet above any forced air inlet located within 10 feet horizontally. This provision does not apply to the combustion air intake of a direct−vent appliance.

(b) The venting system of other than a direct−vent appliance shall terminate at least 4 feet below, 4 feet horizontally from, or one foot above any door, window, or gravity air inlet into any building. The bottom of the vent shall be located at least 12 inches above grade.

(c) The vent terminal of a direct−vent appliance with an input of 10,000 Btu per hour or less shall be located at least 6 inches from any air opening into a building.

(d) The vent terminal of a direct−vent appliance with an input over 10,000 Btu per hour but not over 50,000 Btu per hour shall be located at least 9 inches from any air opening into a building.

(e) The vent terminal of a direct−vent appliance with an input over 50,000 Btu per hour shall be located at least 12 inches from any air opening into a building.

(f) The bottom of the vent terminal and the air intake of a direct−vent appliance shall be located at least 12 inches above grade.

(g) The exit terminal of a mechanical draft system shall be not less than 7 feet above grade where located within 3 feet of a public walkway that is intended for use by the general public.

History: Cr. Register, November, 1979, No. 287, eff. 6−1−80; correction made under s. 13.93 (2m) (b) 7., Stats., Register, March, 1992, No. 435; r. and recr., Register, November, 1995, No. 479, eff. 12−1−95; cr. (3), Register, March, 2001, No. 543, eff. 4−1−01; CR 02−077: am. (2) (a) Register May 2003 No. 569, eff. 8−1−03; correction in (1), (2) (b) made under s. 13.92 (4) (b) 7., Stats., Register December 2011 No. 672; **CR 15−041: renum. (1) to (1) (a), cr. (1) (b), renum. (2) (a) to (2) (a) 2. and am., cr. (2) (a) 1. Register December 2015 No. 720, eff. 1−1−16.**

SPS 323.15 Chimney connectors, smoke pipes and stovepipes. (1) DEFINITION. Chimney connectors, smoke pipes or stovepipes are passages for conducting the products of combustion from a fuel−fired appliance to the chimney.

(2) CONSTRUCTION AND INSTALLATION. The construction and installation of chimney connectors of solid−fuel−burning appliances shall comply with s. SPS 323.045 (4). The chimney connectors of all other fuel−fired appliances shall conform with the following requirements:

(a) *Concealed space.* No chimney connector shall pass through any outside window, door or combustible outside wall, nor be concealed in any closet, attic or similar space.

(b) *Combustible partitions.* Connectors for appliances shall not pass through walls or partitions constructed of combustible material unless they are guarded at the point of passage by:

1. Metal ventilated thimbles not less than 12 inches larger in diameter than the connector;

2. Metal or burned fireclay thimbles built in brickwork or other approved fireproofing materials extending not less than 8 inches beyond all sides of the thimble.

(c) *Pitch and length.* Chimney or vent connectors shall have no more than two 45° offsets with the vertical. The horizontal length shall not exceed 75% of the total vertical height of the total venting system measured from the appliance outlet. Chimney or vent connectors shall be pitched at least 1/4−inch per foot from the appliance outlet collar vent to the chimney inlet.

(d) *Dampers.* 1. Manually operated dampers are prohibited in chimney or vent connectors of all appliances except wood−burning appliances.

2. A listed, automatically operated damper may be used with any heating appliance provided it is installed and used in accordance with the appliance and damper listing.

(e) *Materials and thickness.* Chimney or vent connectors serving liquid fuel or gas appliances shall conform to the type of material and thickness indicated in Table 323.15−A or 323.15−B.

(f) *Clearance.* Single wall metal connectors shall be installed with clearance to combustibles as indicated in Table 323.15−C. These clearances may be reduced if the combustible material is protected in accordance with the requirements of Table 323.04−B.

TABLE 323.15−A
MINIMUM CHIMNEY CONNECTOR GAUGES FOR OIL−FIRED APPLIANCES

	Galvanized Steel Gauge Number	
Diameter of Connector	**Min. thickness (inch)**	**Gauge**
Less than 6 inches	.019	26
6 inches to less than 10 inches	.024	24
10 inches to 13 inches	.030	22
14 inches to 16 inches	.036	20
Greater than 16 inches	.058	16

TABLE 323.15−B
MINIMUM VENT CONNECTOR GAUGES FOR GAS

Diameter of Connector	Galvanized Steel Gauge Number Min. thickness (inch)	Gauge
1 inch through 4 inches	.016	28
5 inches or over	.026	24

TABLE 323.15−C
CHIMNEY CONNECTOR AND VENT CONNECTOR CLEARANCES FROM COMBUSTIBLE MATERIALS (See Note 4)

Description of Appliance	Minimum Clearance Inches (See Note 1)
Single−Wall Metal Pipe Connectors	
Gas Appliances Without Draft Hoods	18
Electric, Gas, and Oil Incinerators	18
Oil Appliances	18
Unlisted Gas Appliances With Draft Hoods	9
Boilers and Furnaces Equipped With Listed Gas Burners and With Draft Hoods	9
Oil Appliances Listed as Suitable for Use With Type L Venting Systems, but only when connected to chimneys	9
Listed Gas Appliances With Draft Hoods. See Note 3.	6
Type L Vent Piping Connectors	
Gas Appliances Without Draft Hoods	9
Electric, Gas, and Oil Incinerators	9
Oil Appliances	9
Unlisted Gas Appliances With Draft Hoods	6
Boilers and Furnaces Equipped With Listed Gas Burners and With Draft Hoods	6
Oil Appliances Listed as Suitable for Use with Type L Vents	(See Note 2)
Listed Gas Appliances With Draft Hoods	(See Note 3)
Type B Gas Vent Piping Connectors	
Listed Gas Appliances With Draft Hoods	(See Note 3)

[1] These clearances apply except if the listing of an appliance specifies different clearance, in which case the listed clearance takes precedence.

[2] If listed type L venting system piping is used, the clearance may be in accordance with the venting system listing.

[3] If listed type B or type L venting system piping is used, the clearance may be in accordance with the venting system listing.

[4] The clearances from connectors to combustible materials may be reduced if the combustible material is protected in accordance with Table 323.04−B.

History: Cr. Register, November, 1979, No. 287, eff. 6−1−80; am. (2) (intro.) and (g), Tables 23.15−A and C, renum. (2) (d) to be ILHR 23.155, Register, January, 1989, No. 397, eff. 2−1−89; r. (2) (c) and (f), renum. (2) (e), (g) and (h) to be (2) (c), (e) and (f), cr. (2) (d), Register, March, 1992, No. 435, eff. 4−1−92; r. and recr. (2) (d), Register, January, 1999, No. 517, eff. 2−1−99; correction in (2) (intro.), (e), (f), Table 323.15−C made under s. 13.92 (4) (b) 7., Stats., Register December 2011 No. 672.

SPS 323.155 Multiple appliance venting. Two or more listed gas−or liquid−fueled appliances may be connected to a common gravity−type flue provided the appliances are equipped with listed primary safety controls and listed shutoff devices and comply with the following requirements.

(1) The appliances shall be located in the same story, except for engineered venting systems.

(2) The appliances shall be joined at a manifold or Y−type fitting as close to the chimney as possible, unless the connector from each appliance enters a separate chimney inlet and the inlets are offset at least 12 inches vertically or the separate inlets occur at right angles to each other.

(3) The chimney connector and chimney flue shall be sized to accommodate the total volume of flue gases. For gas−burning appliances the venting area shall be at least equal to the size of the largest vent connectors plus at least 50% of the area of the other vent connectors.

History: Renum. from ILHR 23.15 (2) (d) and am. Register, January, 1989, No. 397, eff 2−1−89; r. (2), renum. (1) (intro.), (a) to (c) to be (intro.), (1) to (3), Register, March, 1992, No. 435, eff. 4−1−92.

SPS 323.156 Condensate drains. Provisions shall be made so that condensate from heating equipment drains into the sanitary drain system.

History: Cr. Register, January, 1989, No. 397, eff. 2−1−89.

Subchapter VI — Fuel Supply Systems

SPS 323.16 Fuel storage. (1) LP GAS STORAGE TANKS. (a) All LP gas storage tanks shall be constructed, installed and maintained to conform with the applicable sections of ch. SPS 340.

(b) LP gas tanks may not be located inside dwellings.

(c) LP gas tanks shall have welded steel supports and be permanently installed on concrete pads or foundations.

(2) OIL STORAGE TANKS. (a) The total oil storage capacity inside any dwelling unit shall be limited to 550 gallons in one tank, or not more than 275 gallons in each of 2 tanks cross−connected to a single burner.

(b) Oil storage tanks on the inside of any dwelling shall be located at the same level as the burner it serves.

Note: Except as provided in pars. (a) and (b), the installation of oil storage tanks is regulated under ch. ATCP 93, Flammable, Combustible, and Hazardous Liquids.

(3) GAS PIPING SYSTEMS. Gas piping systems, extending from the point of delivery to the connection with each gas−fired appliance or device, shall be installed to conform with NFPA 54, National Fuel Gas Code.

(4) SHUTOFF AND CONTROL DEVICES. (a) Any oil−fired appliance or device connected to a fuel piping system shall have an accessible, approved manual shutoff valve installed upstream of any connector.

(b) Automatic gas−burning heating appliances shall be equipped with listed devices which will shut off the gas to the pilot light and main burner(s) in the event of pilot failure.

(c) Liquid fuel−burning appliances shall be equipped with primary safety controls which will shut off the flow of fuel to the burner(s) in the event of ignition failure.

History: Cr. Register, November, 1979, No. 287, eff. 6−1−80; correction in (1) (intro.), made under s. 13.93 (2m) (b) 7., Stats. Register, February, 1985, No. 350, 3−1−85; r. and recr. (2), (3) and (4) (a), Register, January, 1989, No. 397, eff. 2−1−89; r. (1) (b), renum. (1) (c) to be (1) (b), am. (2), Register, March, 1992, No. 435, eff. 4−1−92; CR 02−077: r. and recr. (1) Register May 2003 No. 569, eff. 8−1−03; correction in (1) (a), (2) (a) made under s. 13.92 (4) (b) 7., Stats., Register December 2011 No. 672; correction in (2) (a) made under s. 13.92 (4) (b) 7., Stats., Register December 2013 No. 696; CR14−010: r. (2) (a), renum. (2) (b), (c) to (a), (b) Register August 2014 No. 704, eff. 9−1−14; **CR 15−041: am. (2) (a) Register December 2015 No. 720, eff. 1−1−16.**

Subchapter VII — Equipment Location and Operation

SPS 323.17 Equipment location. (1) OUTDOOR EQUIPMENT. Outdoor equipment shall be located so as to not restrict the air flow or recirculation of air. Outdoor equipment so located as to be subject to damage shall be protected.

(2) INDOOR EQUIPMENT. All indoor equipment shall be installed with a minimum of 24 inches of clearance for service.

History: Cr. Register, November, 1979, No. 287, eff. 6−1−80.

SPS 323.18 Operation. (1) INSTRUCTIONS. Written instructions shall be provided the owner for the operation and maintenance of the system and equipment.

(2) FINAL TEST REQUIRED. The installer shall test and balance every heating, ventilating and air conditioning system.

History: Cr. Register, November, 1979, No. 287, eff. 6−1−80.